Cutting Tool Material

- As we have seen, that the cutting tool is subjected to: Static & dynamic forces, high temperature, wear & abrasion.
- So, to get reasonable tool life, the tool material should meet the following requirement

1. Hot hardness: Tool doesnot loose its hardness & strength at the high temperature developed during machining. So, tool material must be atleast 35% to 50% harder than the work material.
2. Wear & abrasion resistance:- It should be sufficiently harder (resistance to wear, abrasion & indentation) so that the tool retains its shape & size with cutting efficiency for a reasonable long time.
3. Toughness: It should be sufficient tough (resistant to shock loads) so that the fine cutting edges of the tool doesnot break when it is suddenly loaded.
4. It should be capable of withstanding the sudden cooling effect of coolant used during cutting i.e lower chemical & Mechanical affinity for the work material.
5. It must have high thermal conductivity – (Measure of its ability to conduct heat)
6. It must have low thermal coefficient of expansion | coefficient of thermal expansion.
7) It must have high specific heat
8) It should be easy to form, grind & sharpen to desired geometry.

Selection of Proper Tool Material :-

- Depend upon no. of factors such as
  a) Type of cutting operation
  b) Material of workpiece
  c) surface finish required
  d) Quantity of components to be produced. etc.

Cutting Tool Material :-

1) Plain carbon Tool steel :-

- The material is in-expensive/cheap & can be easily formed/ground/machined.
- The property of the material depend upon the percentage of carbon content.
  - Low carbon steels are Tough & Shock resistance.
  - High carbon steel are abrasion resistant.

But their hardness decreased rapidly above 200°c, so they are useful for low speed operations like drilling, reaming, broaching etc.

Application :- Use to manufacture - Wood working tools, cold chisels, hammers, knives etc.

2) Alloy Tool Steel :-

Plain carbon steel when added with various alloying element than it is referred as alloy tool steel.

- This alloying elements slow down the transformation rates. Due to this the material beleme less susceptible to crack's while quenching.
- This steels have greater wear resistance & hot hardness than the plain carbon steel

Application : These are widely used for drills, taps, reamers etc.

Note :- Can be operational upto cutting temperature of about 300°c.

Some important alloying elements are as follows :-

i) carbon :- It combine to form carbide with iron. Which tends to increase the hardness, strength & wear resistance. (%c - 0.6 to 1.4%)

ii) Manganese (Mn) :- It is added to steel as a deoxidising & desulphurizing agent

iii) Chromium (Cr) - Addition of Cr results in formation of carbides of chromium which are very hard, yet resulting steel is more ductile than a steel of same hardness produced by a simple increase in carbon content.
- It also increased toughness & hardness.

Ferrite phase stabiliser

iv) Molybdenum :- It is a strong carbide forming element.
- It increases strength, wear resistance, hardness.

v) Cobalt :- Commonly used in High speed steel to increase the hot hardness so that the cutting tool can be used at higher cutting speed & temperature

VI) Vanadium - It increases hot hardness & abrasion resistance as it has very high tendency to form carbide therefore used only in small amount

VII) Tungsten :- It is widely used in tool steel because it maintains its hardness even at red heat. It adds both toughness & hardness.

3) High Speed Steel (HSS) :-

This tool material is basically high carbon steel, to which the various alloying element [Tungsten (W), Chromium (Cr), Vanadium (V)] is added in larger amount as compared to alloy tool steel, to improve hardness, toughness & wear resistance properties

- As they are capable of retaining their hardness upto 600°c & so can be operated at much higher speeds as compare to alloy tool steels, hence the name "high speed steel"

- Among all - 18-4-1 HSS contain 18% Tungsten | 4% chromium & 1% Vanadium. Having cutting velocity ≈ 300 m/min & Tempr ≈ 600°c.

Application :- Turning tool steel
Turning non ferrous material such as copper, brass, Aluminium, plastic etc.
Broaches to cut ferrous material
Milling cutters, Gear hobbing, shaping & shaving tools.

4) Sintered / Cemented carbide :-

They consist of tungsten, tantalum & titanium carbides together with a binder usually cobalt all mixed together as fine powders. These powders are compacted into required shape & subjected to high tempr treatment known as sintering.

This methodology produced following properties in it
- Very high hardness (Red hardness) - Very high wear resistance
- high modulous of elasticity - low thermal expansion - high thermal conductivity.

→ Since they are extremely hard, so they can be used upto cutting velocity ≈ 150 m/min & tempr. 850-900°c.

→ But these are weak in tension & are generally brittle in nature. With that they are less tough & due to above it can easily break due to impact load.

→ So, if anyone want to use it than better to use it with insert.

Insert :- It is nothing but fixing of carbide or cementite tool on HSS shank with the help of nut-bolt arrangement.

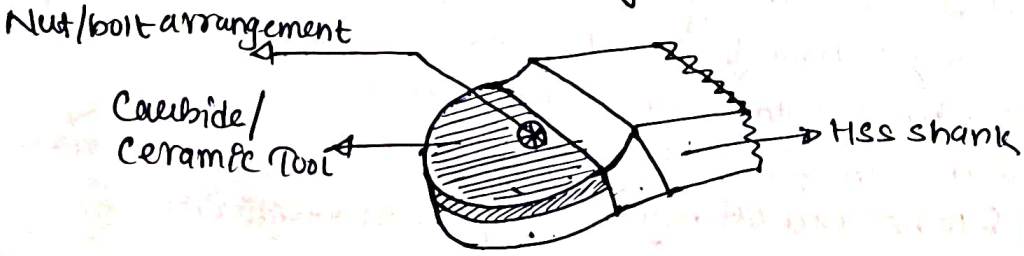

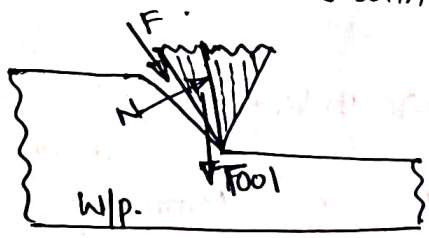

5) Ceramics :-

- This materials are basically aluminium oxide (Al_2O_3) containing boron nitride powder mixed together & sintered at 1700°c form the ingredient of ceramic tools.
- These materials are very hard with good compressive strength.
- They can be used upto cutting velocity of 600 m/minute (1500 m/minute) & upto a tempr of 1300°c
- They resist cratering, usually require no coolant. However in order to take full advantage of their capabilities special & more rigid machine tool are required.
- But their tool life is less than that of tools made up of other materials. Their mode of failure is brittle fracture at random locations of point defects.
- Three types of ceramic cutting tools are mainly used Al_2O_3, Sialon (a combination of silica, Aluminium, oxygen & nitrogen) & silicon nitride.
- Ceramic tools material have high ~~temperature~~ abrasion resistance and are harder than cemented carbide ~~tools~~ & HSS & have less tendency to weld with metals during machining. However they lack impact & toughness, so vibration & chatter are harmful to these tools.

6) Diamond :-

- It is hardest of all cutting tool material.
- It has following properties which makes it ideal choice for being a tool material
  a) Extreme hardness
  b) low thermal Expansion
  c) High thermal (heat) conductivity
  d) Very low coefficient of friction.
- This is used when good surface finish & dimensional accuracy are desired.
- Work material on which diamond are successfully employed are the non ferrous materials such as copper, zinc, Al & magnesium alloy
- But it can't be used with ferrous material because of diffusion of carbon atom from diamond to the workpiece

Application :- single point turning tool & boring tool, milling cutter, reamers, grinding wheel honning tool.

Cutting speed - 200 to 500 m/min ; Temperature withstand ≈ 2000°c with highest tool life.

Note :- Compacts : This material is made up of diamond powder by sintering into moulded shapes by high pressure & tempr technology. It has increased strength & shock resistance than that of single crystal diamond.

7) Cubic Boron Nitride (CBN):

- Next to diamond, CBN is the hardest material currently available.
- This material consist of atom of boron & nitrogen & is produced by high pressure & temperature processing.
- CBN has high hardness & high thermal conductivity & much higher polycrystalline form as compared to diamond.
- It is chemically inert, is used as a substitute for diamond for machining steels.
- Other Application- Grinding wheel, For machining high tempr alloy like Titanium, Nimonic, stainless steel, chilled cast iron.
- The life of CBN Tool is 4 to 5 times higher than that of diamond tool.
- CBN can also be made in the form of inserts & blanks of standard shape & size.

Cutting Fluids:-

- In any metal cutting operation lots of heat is generated due to plastic deformation of metal, friction at the rake face of the tool (between the tool & the chip) & also the friction between the workpiece & the flank of the tool.
- This increases the temperature both of the workpiece & the tool point, resulting in decrease in hardness & hence life of the tool.
- The machined surface will also be rough & the possibility of the built up edge increases.

So, the use of cutting fluid in machining operation is very essential.

- Application of Cutting Fluid Produces following effects:

1) Friction at the workpiece - tool interface is reduced;
2) Heat is reduced due to cooling action at the interface
3) Chips are washed off which helps in better surface finish & use of high feed.
4) Provide lubrication action
5) Reduce force & energy consumption
6) Protect newly machined surface from environmental corrosion.
7) Prevent surface welding of points at high pressure, thus controlling formation of Buildup edge.
8) Facilitates chip breaking in certain material.
9) Due to cooling action maintenance of tool hardness, less tool wear & longer tool li
less distortion & easy handling of the job.

Source of heat in Metal Cutting :-

- The main factors likely to cause excessive heat during Metal cutting operations are as follows -

(i) Cutting speed too high
(ii) Poor surface finish on the cutting face of the tool
(iii) Worn or incorrectly ground cutting tool
(iv) Formation of the buildup edge on cutting face of the tool.
(v) Friction between tool & workpiece.

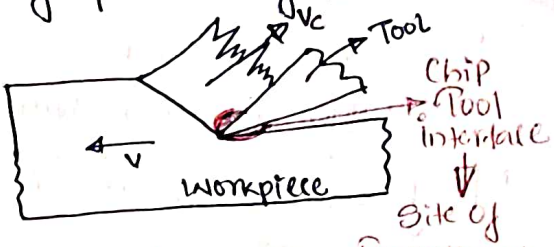

V = Cutting velocity.
Vc = Chip velocity

Note:- Distribution of heat in chips, tool & workpiece is nearly in the ratio of 80 : 10 : 10.

There are three zones at which heats are generated

(i) Shear zone (Primary deformation zone)
(ii) Friction zone (Secondary zone)
(iii) Work tool contact zone

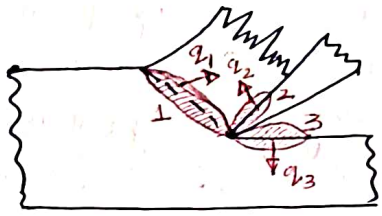

q_1 - Heat generated in shear zone
q_2 - Heat generated in friction zone
q_3 - Heat generated in work-tool contact zone.

Requirement of a Cutting Fluid | Properties of cutting fluid :/ characteristics :-

1) It should wet the surface of cutting tool & workpiece for better cooling & lubricating effect
2) Good lubricating property
3) High heat absorbing capacity
4) High Flash point (lowest temperature at which a flammable material gives off sufficient vapour to ignite in air, given an ignition source)
5) It should not damages or react with the materials of machine tool parts.
6) It should not stain or leave residues on the workpiece surface
7) It should not emit toxic vapours.
8) It should be stable, that is, it should not get oxidised or decomposed when left in air.
9) It should have low viscosity to permit free flow of the liquid.

A cutting fluid mainly serve following functions
- Cooling - Lubrication - Antiwelding.

~~Types of cutting fluids~~

10) It should permit clear view of workpiece which is specifically desirable in the precision work.
11) It should have high heat conductivity & high film coefficient & high specific heat.
12) It should be odorless.

Note:- At cutting speed of more than 60 m/min, the lubricating effect of chemically active cutting fluid is only marginal & for such high speed cutting operations, the cooling action of the cutting fluid is more predominant than its lubricating action.

Types of Cutting Fluids:-

All the cutting fluids can be divided into two groups

i) Water based fluids

ii) Straight or neat oil based fluids.

- Many additives are used in conjunction with each of these fluids to accomplish a variety of specific objectives.
- The most common gaseous cutting fluids are the oxygen & the water vapour in the ordinary atmosphere.
- In some machining operations it also play an important role. The best cutting fluid is one that possesses good oiliness in addition to its cooling properties.
- Welding of cutting tool with that of workpiece can be prevented by adding compound of sulphur, chlorine etc. to the cutting fluids. These compounds generate a soapy film which prevents particles of metal from welding.

A) **Water Based Cutting Fluid:-**

Early attempts to improve cooling & lubricating properties of water included the addition of soft soap but there are now oils which have the desired effect & form emulsion with water. These oils are known as soluble oils.

- The most popular being soluble oil (1-5%) is mixed with water to form an emulsion. This has excellent cooling properties at low cost & there is also some lubricating effect between tool & chip which reduces tool wear.
- Soda solutions are often used on grinding operations as it has good flushing action & cooling effect.
- No doubt water can also be used as a coolant but it causes rust & corrosion.

B) **Straight or neat oil based cutting fluid:-**

The term straight when applied to lubricant & coolants mean undiluted. However most of the oils are not used straight but are mixtures of oils or oil with chemicals such as sulphur & chlorine added to them.

- Straight or neat oils are classified into following subgroups.

(i) Mineral oils:- These are primarily composed of hydrocarbons of different structure & molecular weights.

- These oils are normally used for light machining operations such as turret & capstan lathes where free cutting brasses & steels are being machined.

(ii) Straight Fatty oil :- The most important variety of straight fatty oil is lard oil.
- This oil are not stable & rapidly lose their lubricating properties. Even also they are more viscous which limits its use.
- Lard oil is mainly used during thread cutting with dies.

(iii) Compounded or blended oil :- These are mixtures of mineral & fatty oil.
- With dilution also, they are able to retain their film strength as a result they are much cheaper & more fluid than neat fatty oils.
- They are suitable for heavier duty operation such as threading on capstan & turret lathe, thread milling.

(iv) Sulphurised oil :- When sulphur is mixed with lard oil, it is called sulphurised oil.
- It is used for heavy duty lathe work, gear cutting & thread grinding

(v) Extreme pressure (E.P) cutting oil :- These are mineral oils containing extreme pressure additives like sulphur, Depending on the form in which sulphur is added there are three types of sulphurised E.P oil.
(i) Those containing combined sulphur → Also known as inactive oils
(ii) Those containing free sulphur
(iii) Those containing both combined & free sulphur } → Both are known as Active oils.

vi) Chlorinated oils :- When chlorine is added in mineral oils it is called chlorinated cutting oil.
- When both chlorine & sulphur present in mineral oil, they give the oil a good lubricating property & extreme pressure handling property which makes it suitable for high/severe cutting operations on strong & tough materials such as stainless steels & nickel (Ni) alloys.
- In broaching operations also these oils are quite commonly used.

Application of Cutting Fluids:-

The cutting fluid may be applied to the cutting tool in the following ways

a) By hand, using a brush

b) By means of a drip tank attached to the m/c body

c) By means of a pump, known as Flood application / High Jet method

- for the effective use of cutting fluid & for heavy & continous ~~chip~~ cutting, the fluid should penetrate into the cutting zone & for this (c) method i.e by means of pump is prominently used.

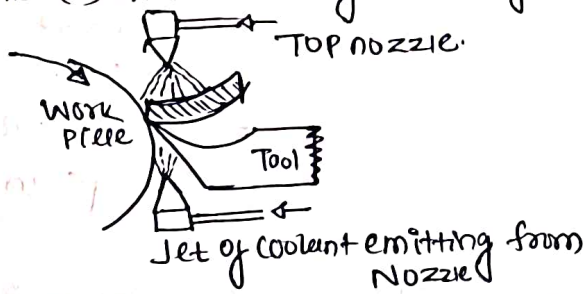

- In this method, a continous stream of cutting fluid is directed at the cutting zone with the help of nozzle or jet. This is also known as "Hi-Jet Method".
- The used cutting fluid drops into a tank at the bottom, before it is recirculated by the pump, it pases through many filters to remove chips & dirts.
- In many cases it gives ~~high Jet method~~ significant increase in tool life. however the apparatus for applying the cutting fluid is expensive & also the high pressure jet may be of some danger to operator. So, no doubt it is economical cum effective way of application but not universally adopted.

d) By Mist Method of Coolant Application:-

- It is the application of cutting fluid as a fine atomized mist (combination of the carrier air & very fine drops of fluid) has recieved considerable attention.
- The size of fluid drop is of the order of 10-25 nemetre & it is spread onto the cutting zone with velocity of about 300 metre/sec & under high pressure.
- Following are the beneficial effects of mist cooling

a) Due to high velocity of fluid application, the disposition of heat is increased & ~~hence~~ it leads to maintain the desirable high tempr gradient near the tool surface.

b) Surface area of the coolant in the form of mist is much greater than in the flood application & hence increase in cooling capacity of the coolant

c) Due to expansion of mist in the issuing nozzle, its tempr falls down considerably.

Due to above reason mist cooling can be applied to almost all cutting operations, but it is generally more useful with high hardness work material. But according to research it has been proved that it is only effective within a limited temperature range where flood cooling loses its effectiveness due to the formation of a vapour layer under it.

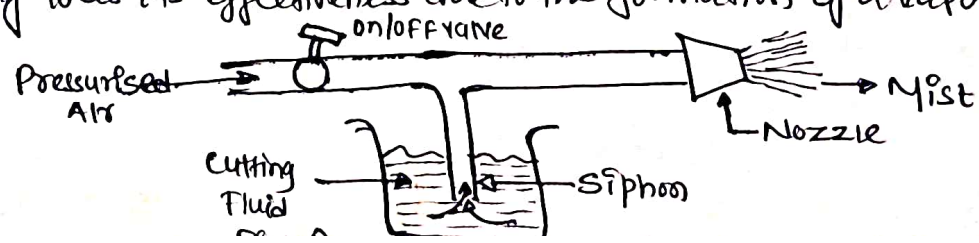

2) **Boring** :- Enlarging a hole completely with an adjustable tool with only one cutting edge

(3) **Counter Boring** :- Enlarging one end of the hole to form a square shoulder with original hole to avoid projection in assemblies.

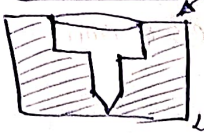

4) **Countersinking** :- Making a cone shaped enlargement to provide a recess for a screw head.

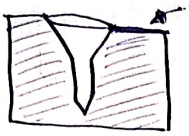

-- **Drill Geometry** :-

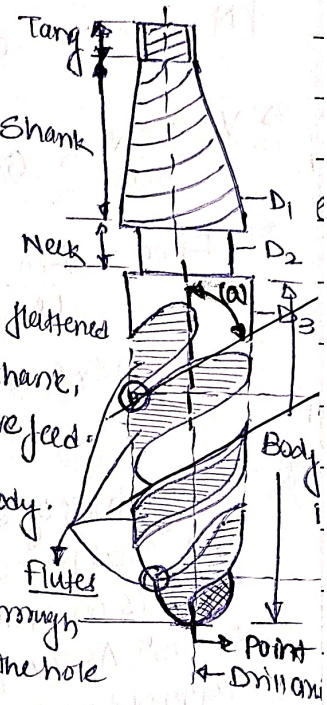

Shank :- Upper cylindrical portion (smooth) of the drill which is used for gripping & driving the drill

Tang - Portion of shank itself. It is a flattened surface/structure at the end of the shank, which receives & transmit the drive feed.

Neck : Smallest dia among shank & body. ($D_2 < D_1, D_3$) due to the reason -
- If tool got failed then it must be through it, so that it can be tug out from the hole easily, as it is the only portion which always present over the workpiece & hence hole can be saved easily while taking out drill bit out.

Flutes :- This are the helical grooves present on the body of the drill. Function of the flutes are
a) To provide clearance to the chip produced at the time of cutting
b) To allow an easy passage to the cutting fluid to reach the cutting edge.

Lead :- It is the distance measured parallel to the drill axis between corresponding point on the flute in one complete revolution.

Cutting Lip :- Conical part present at the bottom end of the drill.

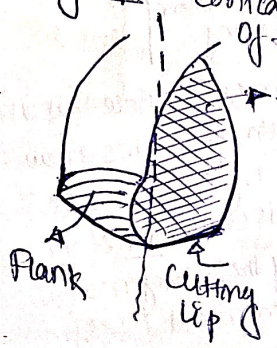

Flank :- It is the surface of the drill which extends from the cutting lip to the following flute.

Face :- Portion of the flute surface adjacent to the cutting lip. It facilitates the removal of cutting chip from w/p.

Lip length - length of cutting edge

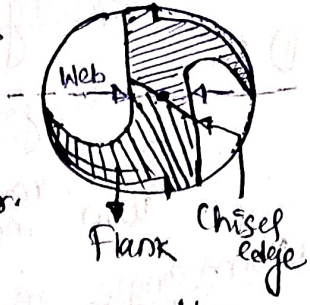

Chisel Edge :- It is the line where both flank intersect each other.

Web :- It is the thickness of the drill between the flutes.

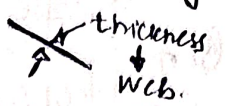

Note :- It increases along the length of the body to provide strength & rigidity to the drill.

- Web :-

Various Angles In drill :-

a) Helix Angle (ψ) :- It is the angle between the leading edge of the drill & the drill axis. Some times it is also known as spiral angle.

- Helix angle depends on the workpiece on which machining is to be done
- Usually - 20 - 35° - most common

Large helix angle :- 45°-60° : suitable for deep holes & softer workpiece (eg-Al)

Small helix angle - For harder/stronger materials (eg-carbon steel)

Zero helix :- Spade drill for high production drilling microdrilling & hard work material.

b) Point Angle :- It is the angle formed between both flanks of the drill.

Low point angle for ductile materials
High point angle for brittle materials

[B↑ → Thinner & wider chip Produce]

c) Lip relief Angle :- It is the angle formed between a flank (not cutting edge) & the line normal to the drill axis measured at the periphery of the drill.

(d) Chisel edge Angle :- It is the angle formed between a chisel edge & the line normal to the drill axis.

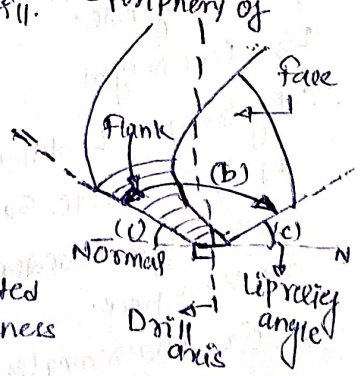

Note :- The point angle is selected to suit the hardness & brittleness of the material being drilled.

- Harder material have higher point angle & softer material have lower point angle.
- Standard point angle - 118°
- It is 116° to 118° for medium hard steel & cast iron.
- It is 125° for hardened steel.
- It is 130°-140° for bronze & brass.
- It is only 60° for wood & plastics.

19.3.4 Drilling and Reaming Tools

The process and methods of drilling holes have already been discussed. The common too used for drilling is the **twist drill** (Fig. 19.21). This tool has progressed through a long history of development in its geometry.

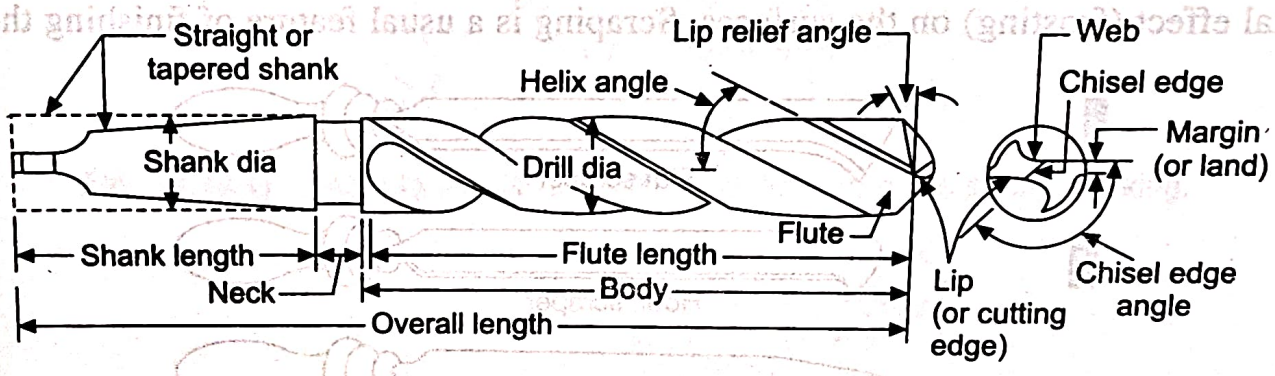

Fig. 19.21 Parts of a twist drill.

Nomenclature of twist drill parts (Fig. 19.21, Fig. 19.22 and Fig. 19.26)

(i) *Body* is that part which is fluted and relieved.

(ii) *Shank* is that part which fits into the spindle of drill press.

(iii) *Point* is the entire cone-shaped surface at the cutting end of the drill.

(iv) *Cutting edge* is that part of the point which is sharp like a knife, and cuts the metal during drilling. *Lips* are the main cutting edges of the drill and are formed by the intersection of the flank and flute surfaces.

(v) *Lip clearance angle* is the surface of the point that is ground or relieved just back of the cutting edge of the drill. For drilling soft metals, this angle is kept 12° and for very hard materials, 6 to 9°.

(vi) *Point angle* or *included lip angle* is usually kept 118° in standard twist drills. Usually very soft metals are drilled with smaller point angle, 90° and harder material with larger point angle, 135°.

(vii) *Margin* or *land* is the narrow surface along the groove that determines the drill size and keeps the drill aligned. Land is the part of a cylinder interrupted by the flutes and diameter of the margin at shank end of the drill is 0.01 to 0.05 mm smaller than the diameter at point.

(viii) *Web* is the metal column in the drill which separates flutes. The web runs through the entire length of the drill between the flutes and is the supporting section of the drill. It gradually increases in thickness towards the shank.

(ix) *Helix angle* determines the rake angle of the cutting edge of the drill. Smaller helix angles 10 to 13° are used for drilling harder and 35 to 45° for softer materials.

(x) *Chisel edge angle* is the angle between the chisel edge and the cutting lip. It varies from 130 to 145°, larger values for smaller drills.

The drill point geometry for various materials is given in Fig. 19.22(c). The web, which is the central section of the drill, does not produce cutting action, rather it gives an extruding action than the cutting action. Heat is generated and power is wasted. For minimizing this action, either the web of the drill is thinned by grinding or a lead hole is used. A lead hole is a small diameter pilot hole which is drilled first before drilling the hole of required size. The web is accommodated in the lead hole. Modifications have been done in the drill by developing split-point drill giving secondary cutting edge which eliminates the web effect at the cutting edge. Figure 19.22(a) shows the action of a conventional twist drill as it breaks through the bottom side of the workpiece as compared to the radial-lip grind, the latter gives a smooth breakthrough and burr-free hole [Fig. 19.22(b)] along with increased drill life.

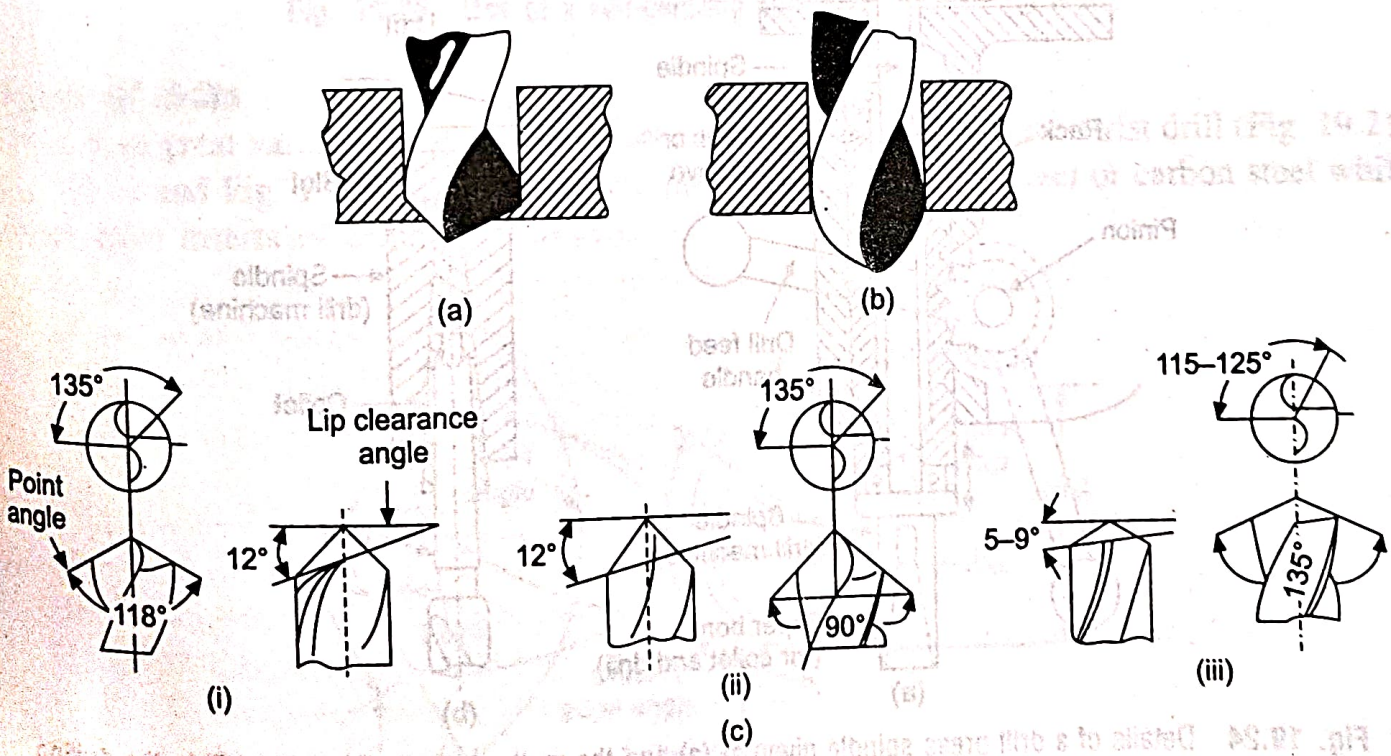

Fig. 19.22 Action of a conventional twist drill is shown at (a) whereas that of a radial-lip grind-drill at (b). The drill-point geometry of a standard twist drill is shown at (i)(c) and that for drilling soft metals at (ii)(c) and for drilling hard metals at (iii)(c).

Standard twist drills or fluted twist drills are made of cobalt or other high-speed steels and high carbon steels, the latter being cheaper type. The drill has two main parts: (a) a cylindrical body with spiral flutes and (b) shank which may be a parallel shank or a taper shank. Parallel shank drills are of smaller size (up to 13 mm diameter) and those above this size, have a tapered shank carrying Morse taper. The shank is held in the drill chuck of the drilling machine. Drills with taper shank have a 'tang' at the end of the shank.

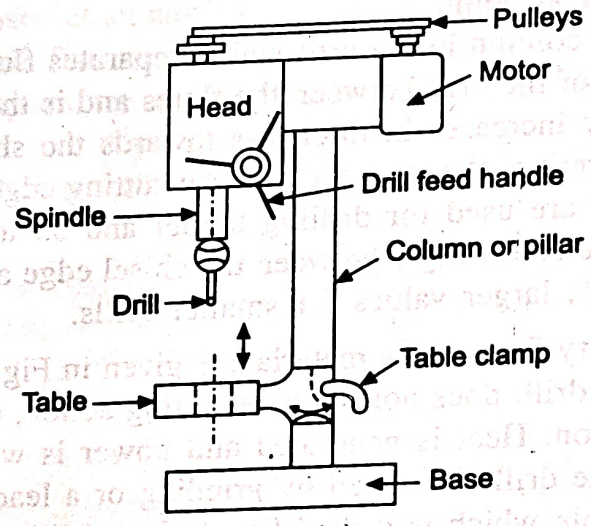

Fig. 19.23 A drill press.

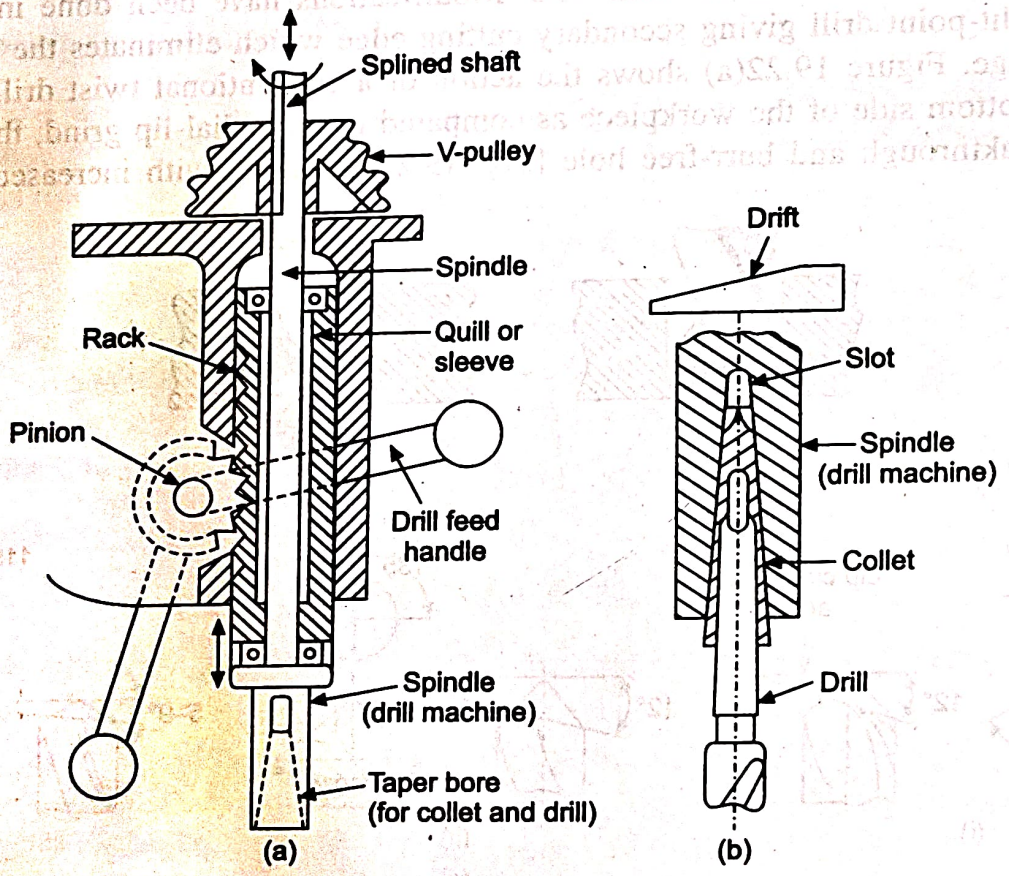

Fig. 19.24 Details of a drill press spindle given at (a) and the method of attaching the drill to the drilling machine at (b). Spindle is a vertical shaft which holds drill. Spindle rotates within a non-rotating quill or sleeve and rack teeth are cut on its outer surface. The sleeve is moved up and down by a pinion meshing with rack and the pinion can be rotated with a drill feed handle. The movement (of sleeve) is imparted to the spindle to give required feed to the drill.

Drill holding devices

The spindle of a drill press (Fig. 19.23) has Morse taper bore at its bottom end [Fig. 19.24(a)] and hence the taper shank drills (or reamers) are fitted in the spindle directly. In cases where drill shank is loose in the spindle hole, a collet (or sleeve) is used in between the drill and the spindle. The collet (and hence drill) may be removed by driving a drift through the slot of the spindle. For securing the drill (and collet) in the spindle, put a wooden block on the table of the drill press and bring the drill down to touch the wooden block and press it further with the help of the feed handle. Holding of straight sank drills in the self-centring chuck (which is later fitted with the drill press spindle in the same way as described for taper shank drill) is shown in Fig. 19.25.

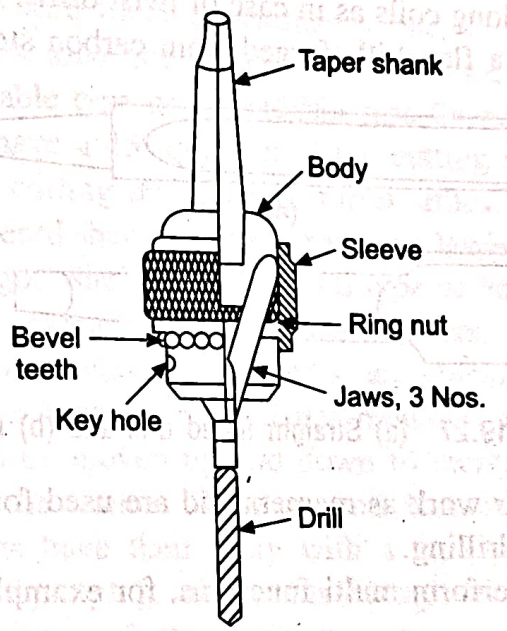

Fig. 19.25 Use of a self-centring chuck for holding the drill.

Types of drills

Drills have great variety and sizes. The most commonly used drill is the twist drill (Fig. 19.21, Fig. 19.22 and Fig. 19.26). Some drills are made from high speed steel or carbon steel while others have inserts of cemented carbides.

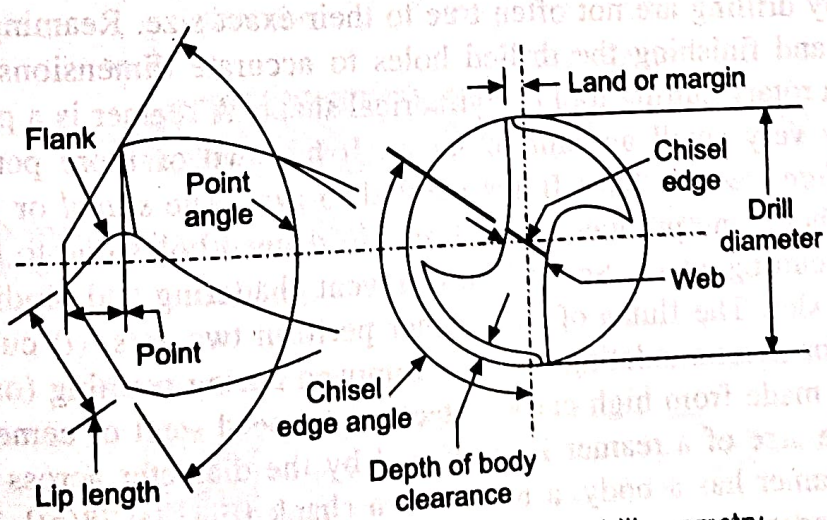

Fig. 19.26 More details of the twist drill geometry.

The important types of drills are as follows:

(i) *Taper shank drills* are general purpose twist drills having a Morse taper on shank.

(ii) *Straight shank drills* have straight shank of the same diameter as the drill body and are general purpose drills.

(iii) *Heavy duty drills* are used for drilling tough materials and deep holes and have heavier webs.

(iv) *Straight fluted drills* [Fig. 19.27(a)] are used for drilling soft metals such as brass and copper because the twist drills tend to dig into these metal.

(v) *Flat drills* [Fig. 19.27(b)] are also used for drilling soft metals. Flat drills make fine chips instead of long coils as in case of twist drills. When a twist drill of proper size is not available, a flat drill (forged from carbon steel) may be prepared and used.

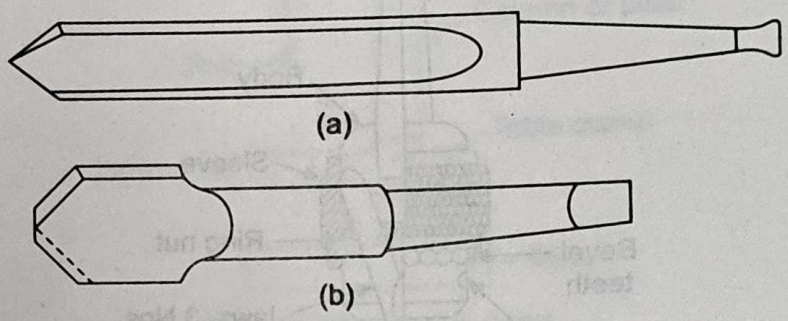

Fig. 19.27 (a) Straight fluted drill and (b) Flut drill.

(vi) *Three fluted drills* work as reamers and are used for enlarging already made holes by punching or drilling.

(vii) *Multi-cut drills* perform multi functions, for example, drilling, counter boring and counter sinking.

(viii) *Core drills* are used for enlarging and correcting the location of already drilled holes because the cutting edge of the core drills does not extend up to the centre of the drill.

(ix) *Oil-tube drills* are used for drilling deep holes. The drill has a central hole through which cutting fluid is forced to cool the cutting edge of the drill.

6.17.1 Drilling Machine Operations

Operations performed on drilling machines include (i) Drilling, (ii) Reaming, (iii) Boring, (iv) Counter boring, (v) Counter sinking and (vi) Spot facing.

As mentioned above, **drilling** is carried out generally with the help of a twist drill. **Reaming** is the operation of finishing the drilled hole to very close tolerances, up to ±0.05 mm or so. It is done with the help of a reamer [Fig. 6.88(a)]. **Boring** is the operation of enlarging the diameter or bore of a predrilled hole using a larger size drill. **Counter boring** [Fig. 6.88(b)] is enlarging diameter of predrilled hole up to only a small depth using a counter boring tool bit. **Counter sinking** is enlarging the top of a predrilled hole in conical shape so that counter sunk head screws can be fitted without their heads projecting out of the job surface. **Spot facing** involves removing of small amount of metal from the top of hole (usually a raised seat made for placing washer, etc.). Tapping, lapping and grinding are also done on a drilling machine.

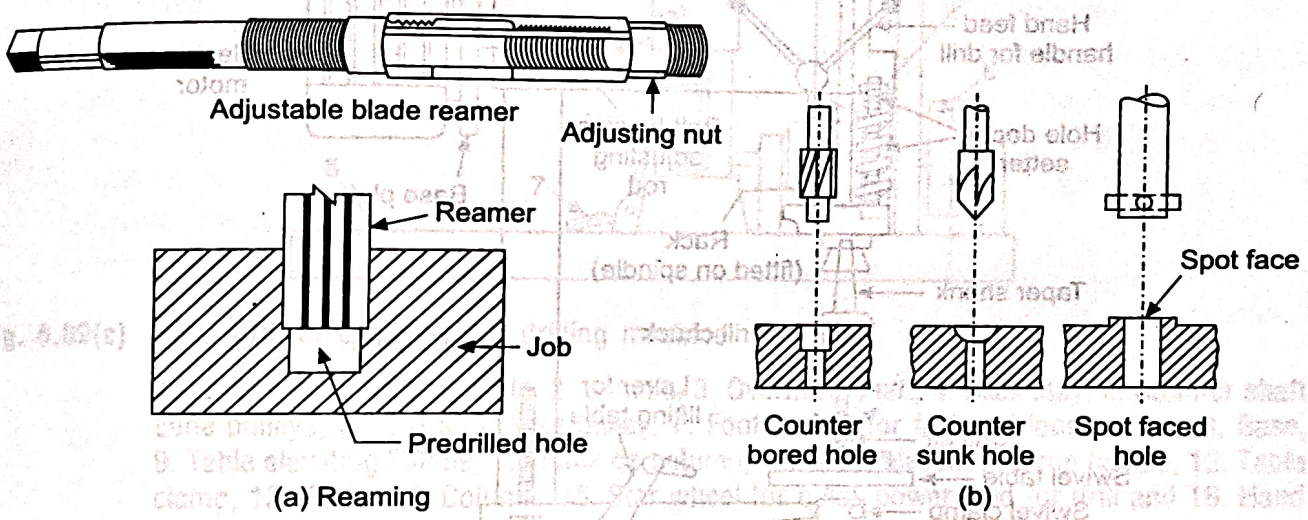

Fig. 6.88 Showing various other operations performed on a drilling machine besides drilling. The operation of reaming is shown at (a) while some of other operations, counter boring, counter sinking and spot facing, are shown at (b).

6.17.2 Types of Drilling Machines

Drilling machines are categorized as below depending on their general constructional features or the specific types of jobs handled on them.

1. **Portable drilling machine** [Fig. 6.89(a)] is a handy powdered drilling tool capable of being easily taken to work sites. It has the capability and flexibility of drilling holes in odd situations. These are usually available up to 15 mm drill capacity.
2. **Bench** or **sensitive drilling machine** [Fig. 6.89(b)] is a simple but sensitive drilling machine made for drilling small holes at high speed in light jobs, and has handfeed for feeding drill in the job during drilling. Machines may be direct motor driven or belt driven. These machines are used for drilling up to 13 to 16 mm size holes (also see Fig. 19.24).

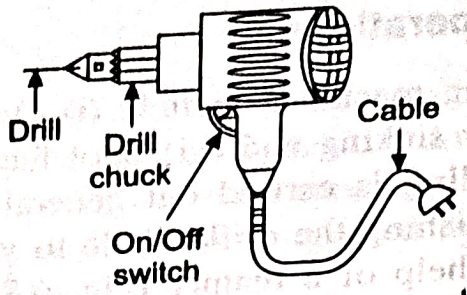

Fig. 6.89(a) Portable drilling machine.

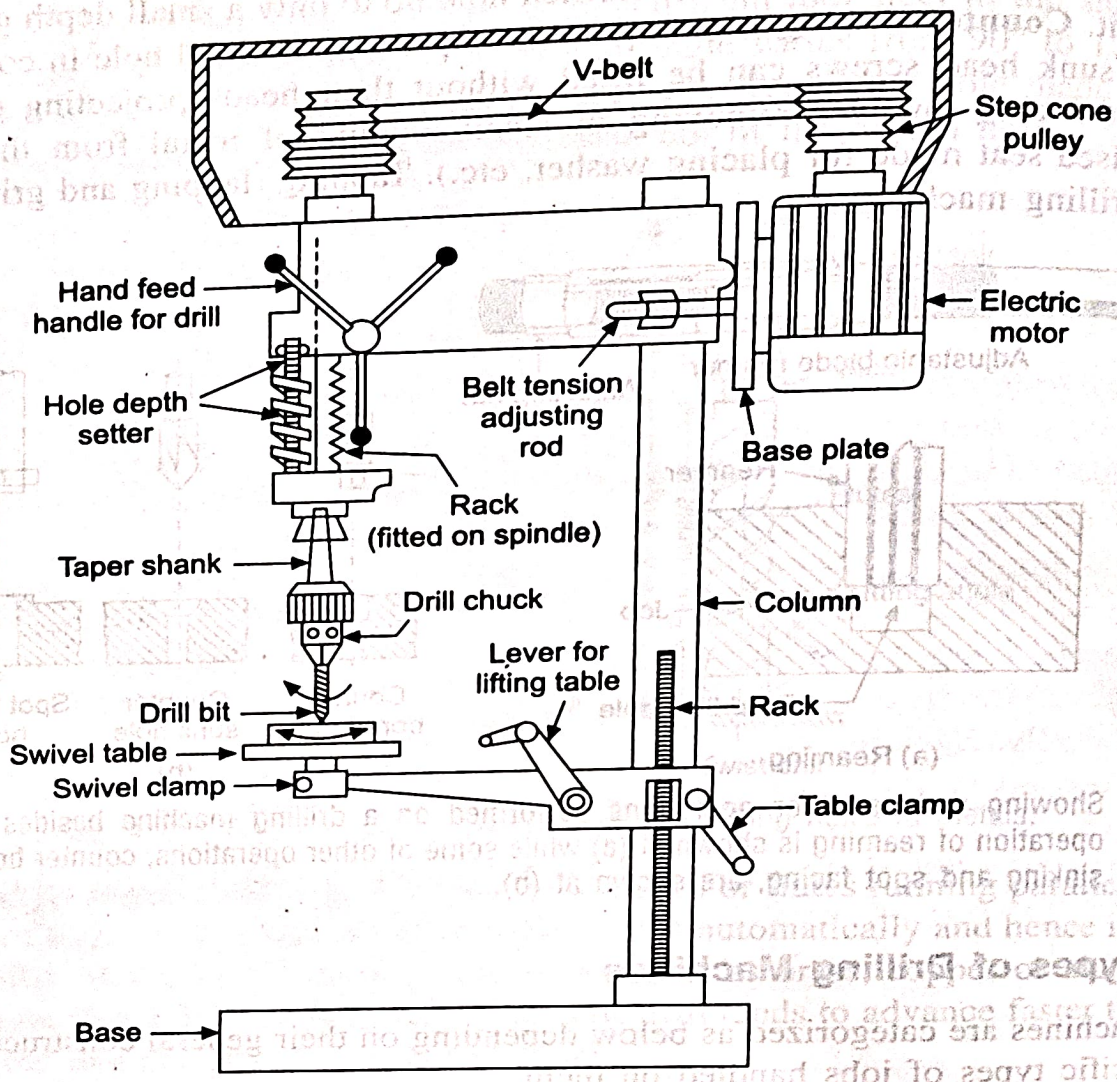

Fig. 6.89(b) Bench or sensitive drilling machine.

3. **Pillar drill** or **upright drilling machine** [Fig. 6.89(c)] is similar to bench drilling machine, except that it is larger in size, robust in design and is used for heavier work. It has power feed mechanism for feeding the drill (max. 40 mm dia).
4. **Radial drilling machine** (Fig. 6.90) is suitable for handling drilling work on large workpieces where it is easy to move the drilling head (or spindle head) of the drill machine at the appropriate drilling position on the job placed on the large base of the drill machine. It has been made possible by giving facility for turning the radial arm and moving the drilling head along the radial arm. Holes up to 50 mm diameter are easily drilled on these machines.

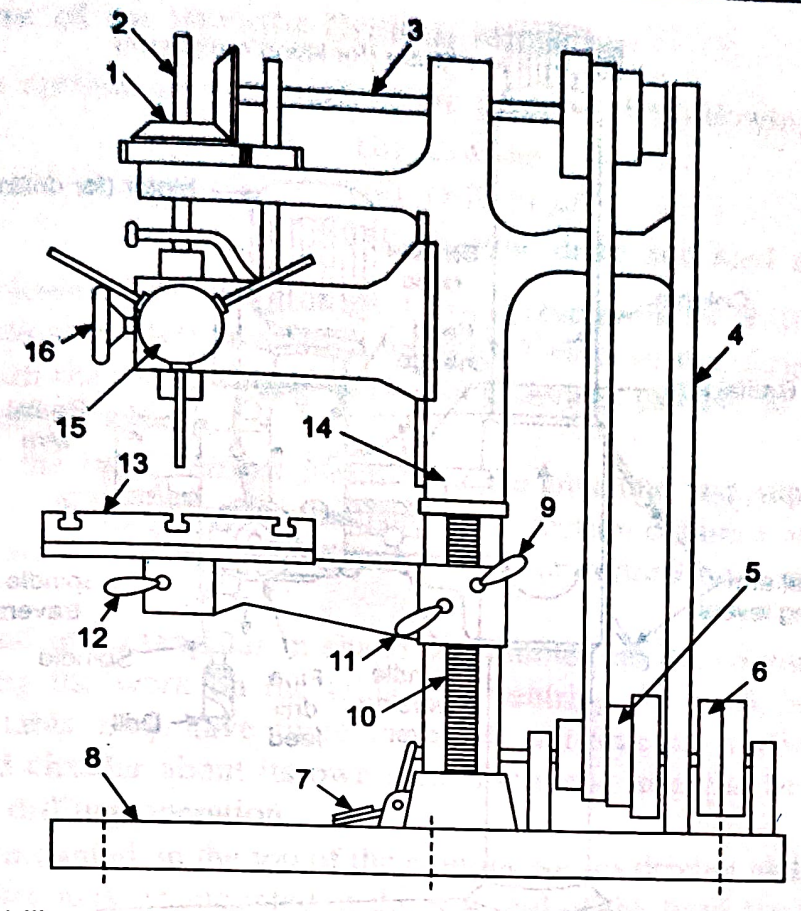

Fig. 6.89(c) Pillar drill or upright pillar drilling machine.

1. Bevel gear drive to spindle, 2. Spindle, 3. Overhead shaft, 4. Back stay, 5. Counter shaft cone pulleys, 6. Fast and loose pulley, 7. Foot paddle for fast and loose pulley, 8. Base, 9. Table elevating handle, 10. Rack on column, 11. Table elevating clamp handle, 12. Table clamp, 13. Table, 14. Column, 15. Star wheel for quick power feed for drill and 16. Hand wheel for sensitive hand feed for drill.

5. **Gang drilling machine** comprises a number of single-spindle drilling machine columns placed side by side on a common base and having a common work table. Four to six spindles may be mounted side by side. This type of machine is used for production work because series of operations may be performed on the job by simply shifting the job from one position to another on the work table. Each spindle is set up with different tools for different operations.
6. **Multiple-spindle drilling machine** drills a number of holes in a workpiece simultaneously ensuring reproduction of the same pattern of holes in a number of identical pieces in mass production. These machines have several spindles driven by a single motor and all the spindles holding drills are fed into the workpiece simultaneously.
7. **Automatic drilling machines** are mass production machines as they perform a series of machining operations at successive units and transfer the work from one unit to the other automatically. In addition to drilling, these machines are used for honing, milling and other similar operations.

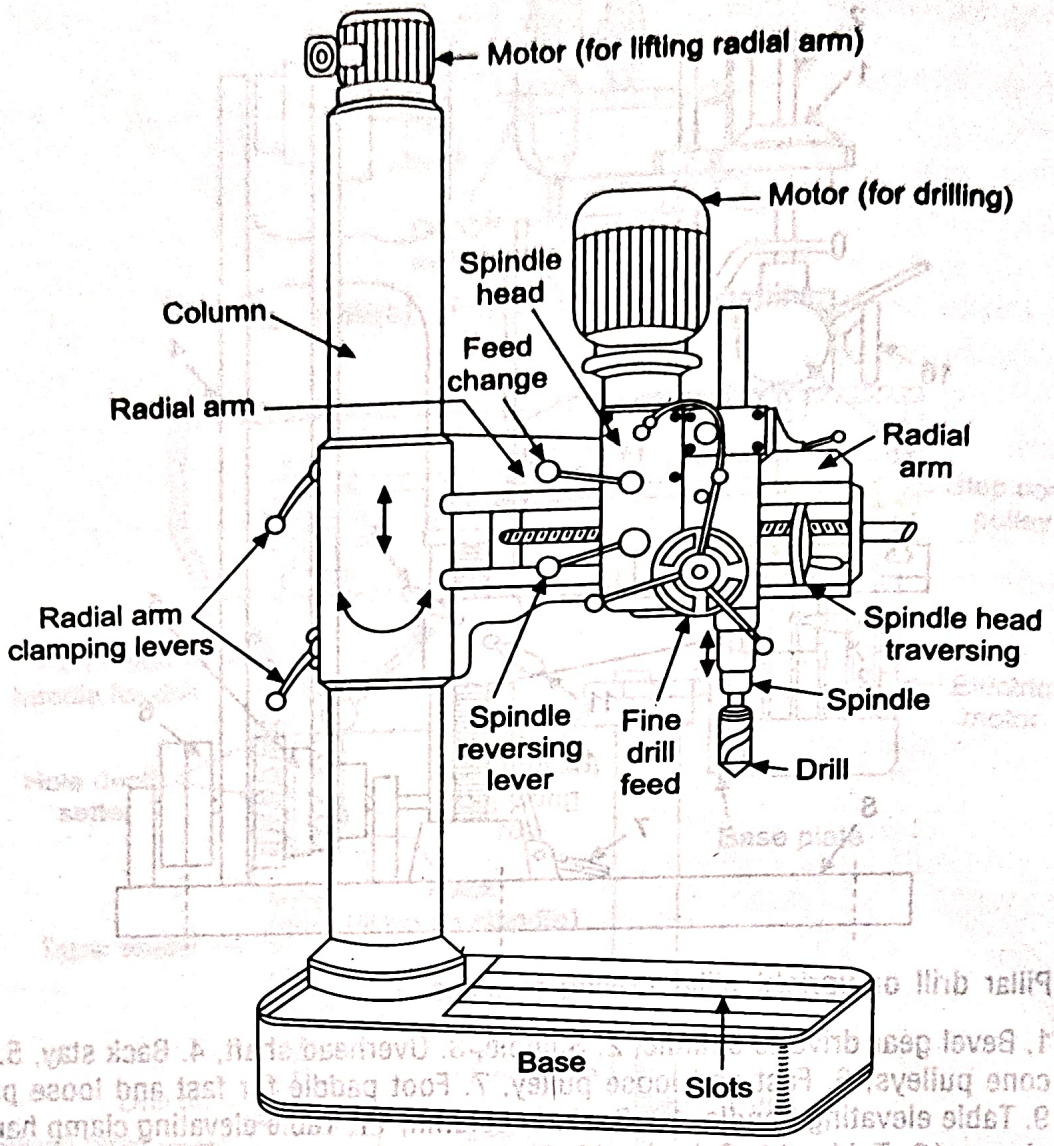

Fig. 6.90 A radial drilling machine.

8. **Deep hole drilling machines** are used for making holes of deeper depth in rifle barrels, long shafts, etc. These may be horizontal or vertical type. They operate at high speeds but a low feed and sufficient quantity of lubricant is pumped to the cutting point to help removal of chips and cooling the cutting edge of drill. The work is usually rotated while the drill is fed into the work.

6.17.3 Size of a Drilling Machine

The drill machine size is related to the type of machine being considered. For example, portable drilling machine is specified by the maximum diameter of drill it can handle. Upright sensitive drilling machine size is given by the diameter of the largest workpiece that can be centred under the spindle. Other features included in specifications or size of a drilling machine are table diameter, maximum size of drill that can be handled, spindle travel, spindle speeds and feeds, motor capacity, etc. In case of radial drilling machine, diameter of column and length of arm are also specified besides other particulars as given above.

6.17.4 Main Parts of an Upright Drilling Machine

Different parts of an upright drilling machine are given in the following. Refer Fig. 6.89(c).

(i) Base (ii) Column
(iii) Table (iv) Drill head
(v) Spindle (vi) Spindle drive and feed mechanism

1. **Base** is the lowest part on which the vertical column of the drill machine is mounted. The base has accurately machined top with T-slots so that large workpieces may be clamped with the base using work holding devices capable of being fitted and held in T-slots of the base.
2. **Column** is the rigid vertical member of the machine and supports the work table and the head with driving mechanisms. Box section columns are stronger and rigid. Rack teeth are cut on the face of the column for vertical movement of the work table and arm.
3. **Table**, round or rectangular in shape, is mounted on the column and carries T-slots for clamping the work on the table. For centring the work below the spindle (or drill), the table may have three types of adjustments: vertical, radial about the column and circular about its own axis. Table and arm can be clamped in position during the drilling operation.
4. **Drill head** mounted on the top of the column houses driving and feeding mechanisms driving motor may be mounted at the rear end of the head for counterbalancing the weight of the drill spindle.
5. **Spindle** is a vertical shaft which holds and powers the drill. It gets its power (from motor) through bevel gears or cone pulley (Fig. 19.24). The spindle rotates within a non-rotating sleeve called *quill*. Rack teeth are cut on the outer surface of the sleeve and the sleeve may be moved up and down by rotating pinion to effect the vertical movements of the spindle. The lower end of the spindle carries the taper bore to hold the collet and the drill.
6. **Spindle drive and feed mechanism** comprise systems for driving spindle at different speeds and with different feeds. Multiple speed of the spindle are obtained by (a) step cone pulley drive, (b) step cone pulley drive with back gears and (c) gearing. Feed in drilling machine is effected by the vertical movement of the drill into the work. Feed movement is controlled either by hand or by power. Further, the hand feed may be *quick traverse feed* and *sensitive hand feed*. Quick traverse feed brings the drill rapidly to the location of hole or for withdrawing the drill at the end of drilling operation. Automatic power feed is used for drilling larger holes as cutting pressure required is fairly high.

Reamers

The holes made by drilling are not often true to their exact size. Reaming is the operation of sizing, enlarging and finishing the drilled holes to accurate dimensions with the help of a reamer, which is a rotary cutting tool of cylindrical shape. A reamer is a precision cutting tool and removes only very small amount of metal. It has two or more peripheral grooves (or flutes). *Straight flute reamers* have flutes parallel to axis. The *spiral* or *fluted reamers* have right or left hand helix and produce better finish in reamed holes due to the smooth shearing action with spiral cutting edges. Spiral flutes prevent chattering and binding in a hole having a long keyway or slot. The flutes of the reamer perform two acts, (i) cutting action and (ii) work as grooves for accommodating the chip removed during reaming (or cutting) the metal.

Reamers are made from high carbon steel, high speed steel or cemented carbide tipped tool materials. The size of a reamer is measured by the diameter across two margins at the cutting edge. A reamer has a body, a neck and a shank [Fig. 19.28(a)]. The body has (a) a cutting section (starting taper portion) with a 90° bevel and (b) a sizing section which is cylindrical and a back-tapered section. The starting taper portion (main cutting section) is

much longer in hand reamers than the machine reamers. The sizing section guides the tool and also sizes the hole by slight cutting. The back-tapered section reduces friction against the reamed hole and prevents cutting of over-sized holes. Reamers are either hand type or machine type [Fig. 19.28(a)]. These may have cylindrical or tapered section depending on the hole to be made and may have 6 to 16 flutes irregularly spaced along periphery to have better quality of reamed hole.

Types of reamers: Reamers can be classified into the following categories.

(i) **Hand reamers** [Fig. 19.28(a)] are ground straight on the whole length but tapered at the end to facilitate entry of the reamer into a hole. The shank end is machined square to receive the wrench with which the reamer is rotated (or operated). During working, the reamer should be started true and kept straight in the hole. The hand reamers may be solid type, adjustable type or expandable type (having limited expansion).

(ii) **Machine reamers** have a 45° chamfer at the cutting edge [Fig. 19.28(a)] and are employed on screw cutting machines or turret lathes. Machine reamers are either straight shank or tapered shank and have narrower lands and backed off (longitudinal relief) in whole length. Shell reamers, solid type or having inserted carbide blades [Fig. 19.28(c)], are examples of machine reamers. Different types of machine reamers, also known as chucking reamers, are shown in Fig. 19.28(b).

(iii) **Adjustable reamers** have separate blades mounted on the grooves in the reamer body and these can be moved up and down to increase or decrease the effective cutting diameter of the reamer. These are both hand reamers and machine reamers.

(iv) **Expansion reamers** have their body with a tapered bore and slitted to permit slight expansion. A taper plug, which runs through the hole, works like an expander.

(v) **Shell reamers** are used with the machine arbor or a mandrill with driving pins or lugs for use on the machine. These may be solid shell type or with inserted carbide blades [Fig. 19.28(c)].

(vi) **Taper reamers** are available both as hand reamers and machine reamers and are used for tapered holes and production of taper sleeves and sockets. *Taper roughing reamer* and *taper finishing reamer* are shown in Fig. 19.28(d).

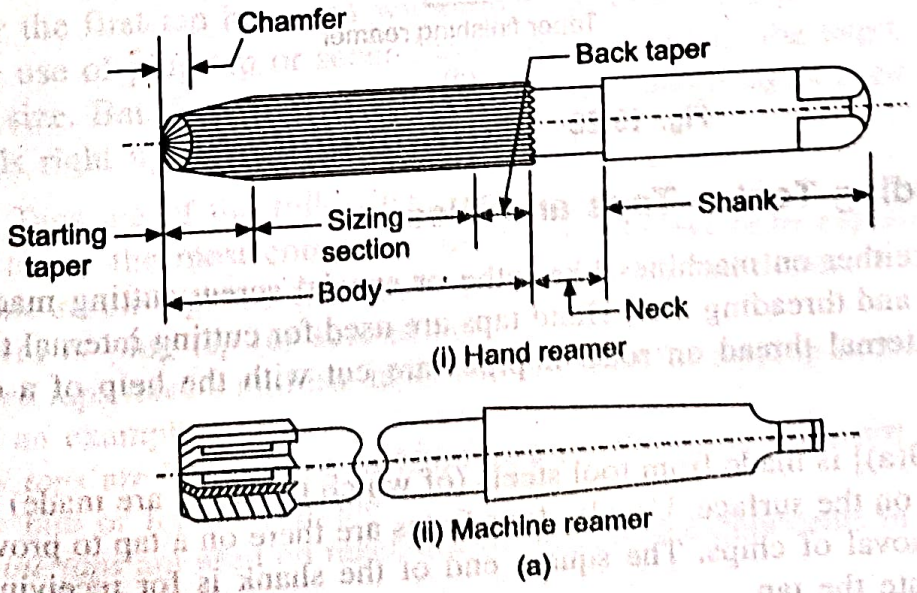

Fig. 19.28 (*Contd.*)...

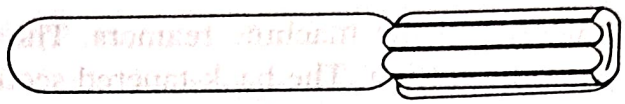

Straight shank chucking reamer

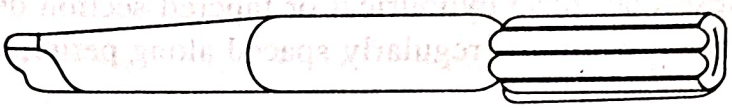

Taper shank chucking reamer

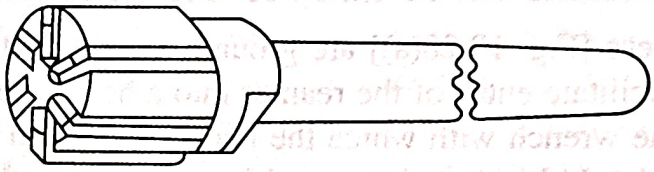

Adjustable chucking reamer

(b)

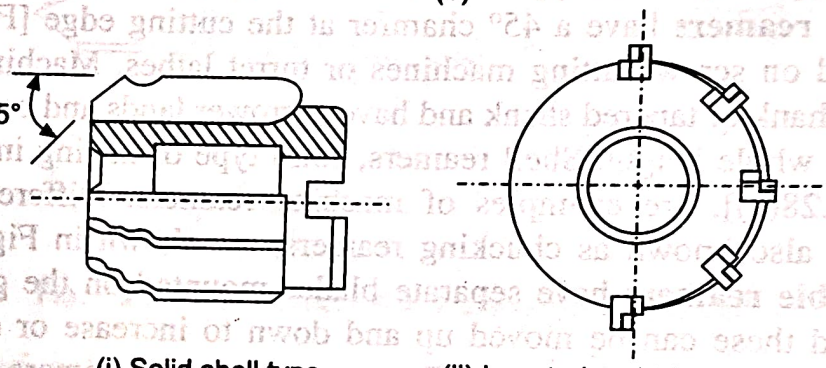

(i) Solid shell type machine reamer

(ii) Inserted carbide blade type shell machine reamer

(c)

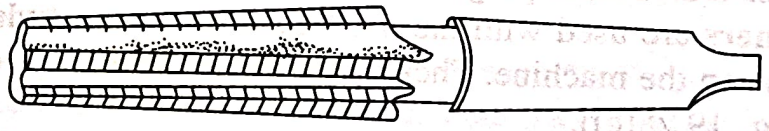

Taper roughing reamer

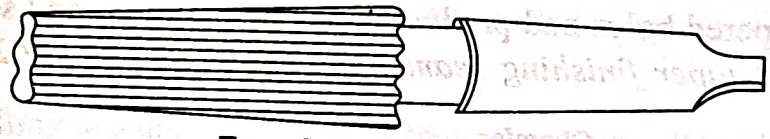

Taper finishing reamer

(d)

Fig. 19.28 Different types of reamers.

Thermal Aspects of Machining / Chip Formation :-

- Work is done during the process of chip formation, which results in the generation of heat
- Work is also done in the plastic deformation of the layer being cut & in overcoming the friction on the tool – face & flank.

- The heat balance in chip formation can be written as.

Total amount of heat generated = Amount of heat carried away in chips + Amount of heat remaining in the cutting tool + Amount of heat passing into the w/p + Amount of heat radiated into the surrounding air (via radiation)

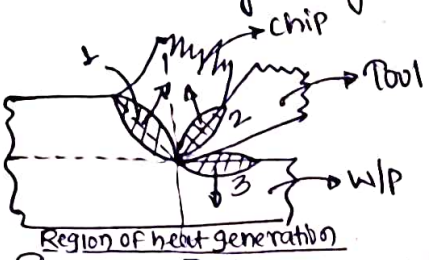

- There are 3 zones at which heats are generated
  1) Shear zone (Primary deformation zone)
  2) Friction zone (Secondary zone)
  3) Work tool contact zone

Effect of Heat Generation during Machining :-

1) Heat passing into the tool reduces its hardness & makes it less wear resistant.
2) Heat evolved in the chip formation zone & at the interface (chip-tool & tool-work interface) strongly affect the condition of rubbing surface i.e by changing their coefficient of friction,
3) Even heat generation affects the machining accuracy, tool wear, built-up edge formation etc.

Factor Affecting Cutting Temperature :-

1) Following are the prominent factors that will leads to generation of heat

a) **Work material** :- Cutting tempr is strongly affected by mechanical properties of the work material, more resistance it will offer in chip formation, more work will required to deform it & hence it will result more heat generation.
If work material has high thermal conductivity than it will result in high dissipation of heat which leads to less accumulation of tempr & hence less increase in temperature of w/p.

b) **Cutting variable** - Feed, depth of cut & cutting velocity are referred to as cutting variables in machining.
   a) **Cutting speed** :- It is seen that with increase in speed, the generation of heat is also increased.
   ∵ Heat generation = $F_c \times V$. So if $V \uparrow \rightarrow Q \uparrow$

Distribution of Heat :-

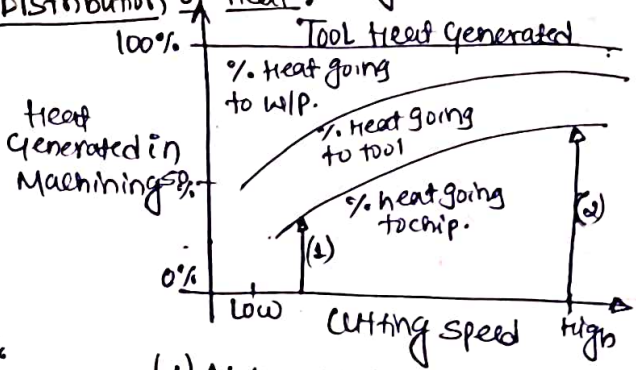

(1) **At low velocity** -
% heat going to chip is less than that of % heat transferred to tool & w/p. which is undesirable.

(2) **At high velocity** -
% heat going with chip is high (~80%) than that of % heat transferred to tool & w/p & it is desirable condition.
Distribution of heat in chip, tool & w/p is nearly in the ratio of 80 : 10 : 10.

→ Non uniform distribution of heat is seen b/w the chip & the tool, hence tempr in layers of chip nearer to tool face is higher than farther away

→ Highest tempr in workpiece is seen/observed at the point of contact of the tool with the work & decrease further away.

→ Highest tempr in tool is observed in the area of contact of contact with chip & the job.
The tool face is heated to higher tempr than flank as it received heat both from heated chip & from work done in overcoming friction of the chip on the face, whereas the flank will undergo less plastic deformation & less tempr increase.

b) Feed & Depth of cut : It is seen that with the increase in feed & depth of cut, the cutting forces also increased & if cutting forces increased than rate of generation of heat is also increased but in the same time the effect of feed on tempr is less than that of cutting velocity. Meanwhile the effect of depth of cut on cutting tempr is even less than that of feed.

c) Tool Geometry : The cutting tempr is affected mainly by the rake angle, Approach angle & nose radius & cross section area of tool shank.

i) Rake Angle - $\alpha \uparrow \rightarrow$ sharpness of tool $\downarrow \rightarrow$ cutting force $\uparrow \rightarrow$ heat generation $\uparrow$

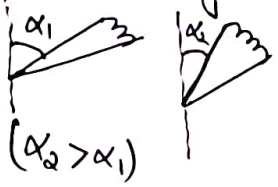

But at the same time with increase in rake angle, the material behind the tool increases which leads to effective dissipation of heat via tool & hence decrease the tempr of tool upto some extent.

ii) Approach Angle :- Larger the approach angle leads to higher cutting temperature & more the tool is heated by cutting.

iii) Nose Radius :- Larger the nose radius, greater the deformation & cutting forces & more the amount of heat is generated during chip formation

- However increased in nose radius increased in length of active part of the cutting edge & the mass of tool point which promotes better strength & heat dissipation from the tool.

iv) Cross section Area of Tool shank :- Larger the x sic area of tool shank will help in increased removal of heat by conduction result in lowering cutting tempr.

d) Cutting Fluid :- The cutting fluid help in reducing the cutting tempr by reducing friction, facilitating the chip formation, absorbing & carrying away a part of generated heat.

Measurement of Temperature in the Cutting zone :-

The various technique used for measurement of tempr in the cutting zone / interface.

1) Tool Work Thermocouple
2) Radiation Pyrometer
3) Thermo couple embedded in the tool & / or the workpiece
4) Temperature sensitive paints
5) Indirect calorimetric techniques etc.

1. Tool-work Thermo-couple :- This is the most common and simpler technique for measuring temperature in the cutting zone.

Here, the e.m.f. generated between the tool-work interface (hot junction) and their cold ends (cold junction) is taken as the mesure of average temperature in the cutting zone. The e.m.f. generated is measured with a millivoltmeter. Fig. 6.15: shows schematically a typical layout of tool-work thermocouple. Both the work and the tool should be insulated from the machine tool. There should be a good contact between the two junctions and the measuring instrument. For this, a copper disk is mounted at the free end of the lathe spindle. The edge of the disk dips in a cup of mercury. The circuit is completed with mercury and the tailend of the tool through a millivoltmeter. The magnitude of e.m.f. generated will depend upon the temperature difference between hot and cold junctions, and the nature of tool and workpire. The measured e.m.f. is converted into temperature with the help of a calibration curve.

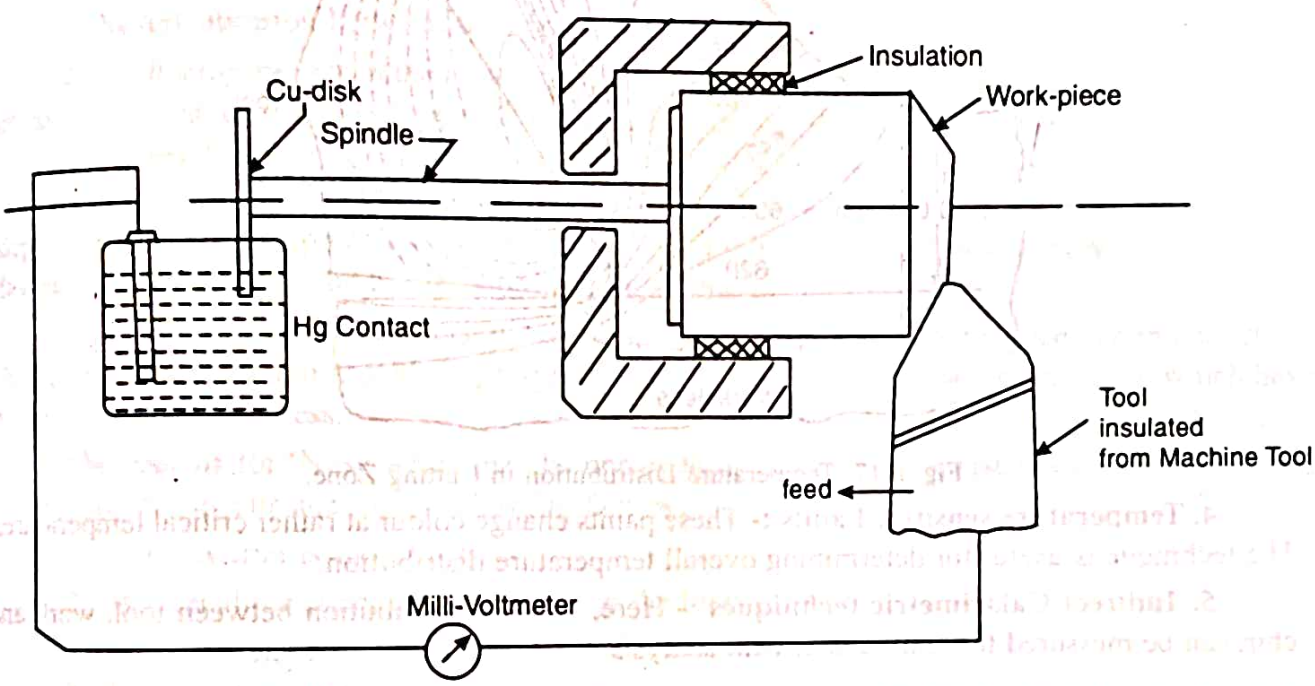

Fig. 6.15. Tool-Work Thermo-couple.

The calibration is done with the help of a standerd thermo-couple, Fig. 6.16. A chip and a piece of tool material are heated in an oven or lead bath at known temperatures. The resulting thermal e.m.f. E_1 is measured. A standard thermo-comple (chromel-alumel) E_2 records the bath temperature at which the e.m.f. E_1, is measured. If the plot of E_1 versus θ is the same while θ increases at it is while θ decreases (that is, there is no hysteresis), the calibration is satisfactory.

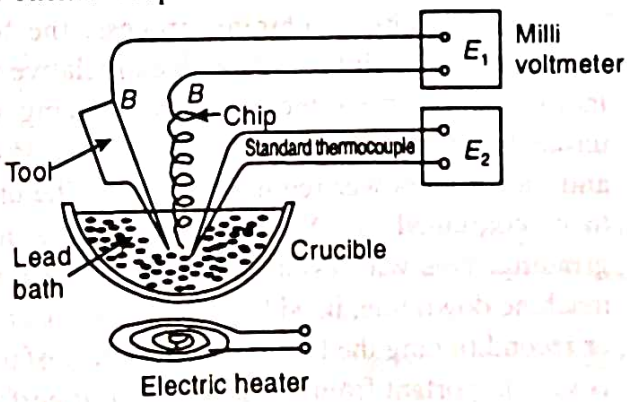

Fig. 6.16. Tool-Work Thermo-couple Calibration.

2. Embedded Thermo-couples :- This technique has been successfully used for determining the temperature distribution on the rake face of a cutting tool. But, the method involves considerable effort.

3. Radiation Pyrometers :- Here, the infrared radiation from the cutting zone is monitored with a radiation pyrometer and interpreted in terms of temperature. The method involves taking photographs of the side face of the cutting zone and also of strips of known temperatures. The intensities of radiation at different points in the cutting zone (tool, chip, workpice) are compared

with strips of known temperatures. This will give temperature distubution on the tool, chip and workpice, Fig. 6.17. The technique has been exetensively used by Boothryod. The drawback is that it indicates only the surface temperatures. Also, the accaracy of the results depends upon the emissivity of the surfaces, which is very difficult to determine accurately.

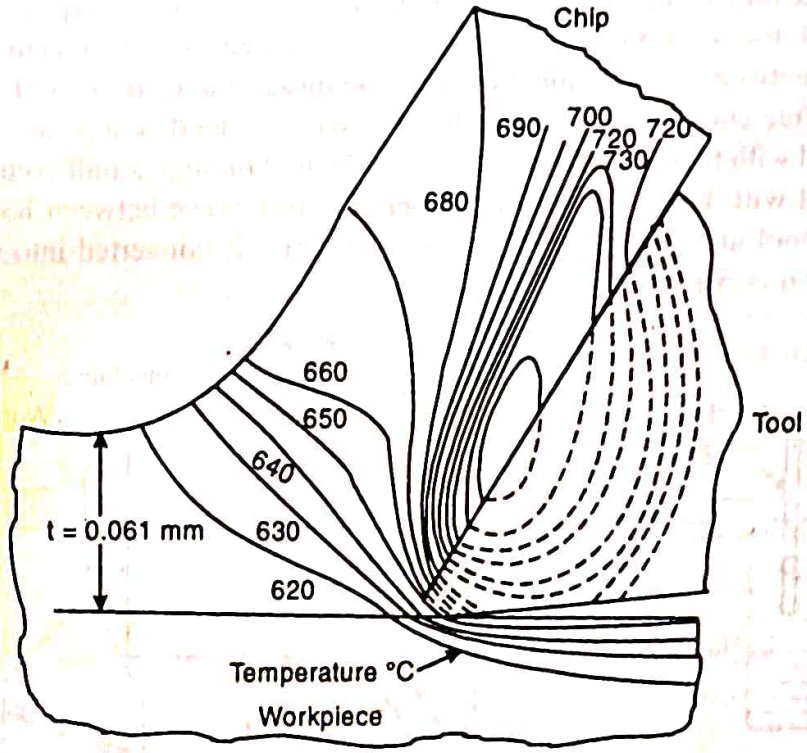

Fig. 6.17. Temperature Distrubution in Cutting Zone.

4. Temperature sensitive Paints :- These paints change colour at rather critical temperatures. The technique is useful for determining overall temperature distribution.

5. Indirect Calorimetric techniques :- Here, the heat distubution between tool, work and chip can be messured for comparison with analysis.

6.8. TOOL WEAR AND TOOL LIFE

During any machining process, the tool is subjected to three distinct factors : forces, temperature and sliding action due to relative motion between tool and the workpiece. Due to these factors, the cutting tool will start giving unsatisfactory performance after some time. The unsatisfactory performance may involve : loss of dimensional accuracy, increased surface roughness, and increased power requirements etc. The unsatisfactory performance results from tool wear due to its continued use. When the tool wears out, it is either replaced or reconditioned, usually by grinding. This will result in loss of production due to machine downtime, in addition to the cost of replacing or reconditioning the tool. Thus, the study of tool wear is very important from the stand point of performance and economics. Due to a large number of factors over which the tool wear depends (hardness and type of tool material, type and condition of workpiece, dimensions of cut, *i.e.*, feed and depth of cut, tool geometry, tool temperature, which, in turn, is a function of cutting speed, surface finish of tool temperature and cutting fluid), the majority of studies in tool wear are based on experimental observations, since the analytical study will be very difficult.

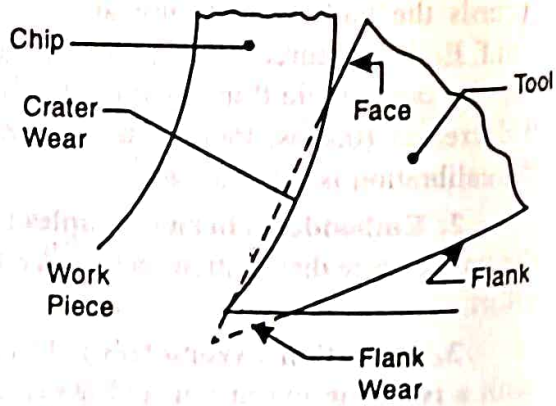

Fig. 6,18. Tool Wear.

Tool wear or tool failure may be classified as follows:

(*a*) Flank wear.

(*b*) Crater wear on tool face

(*c*) Localized wear such as the rounding of the cutting edge, and

(*d*) Chipping off of the cutting edge.

Flank wear and crater wear are shown in Fig. 6.18. Flank wear is attributed usually to the following reasons :

1. Abrasion by hard particles and inclusions in the workpiece.
2. Shearing of the micro welds between tool and work-material.
3. Abrasion by fragments of built-up edge blow- ing against the clearance face of the tool.

Crater wear usually occurs due to :

1. Severe abrasion between the chip and tool face.
2. High temperatures in the tool-chip interface reach- ing the softening or melting temperature of tool resulting in increased rate of wear. The sharp increase in wear rate after the interface temperature reaches a certain temperature is attributed to 'diffusion'. diffusion is the movement of atoms between tool and chip materials resulting in loss of material from the face of the tool. It depends upon the workpiece materials, in addition to temperature. So, unless these conditions are favourable, crater wear due to diffusion may be absent.

Crater wear is more common in cutting ductile materials, which produce continuous chips. Also, it is more common in HSS (high speed steel) tools than ceramic or carbide tools, which have much higher hot hardness.

The reasons for 'Nose wear' may be one or more of the reasons discussed above. Chipping of the tool may occur due to the following factors :

1. Tool material is too brittle.
2. As a result of crack that is already in the tool.
3. Excessive static or shock loading of the tool.
4. Weak design of the tool, such as a high positive rake angle.

6.8.1. Tool Life. The total cutting time accumulated before tool failure occurs, is termed as 'tool life'. There is no exact or simple definition of tool life. However, in general, the tool life can be defined as tool's useful life which has been expended when it can no longer produce satisfactory parts. The two most commonly used criteria for measuring the tool life are :

1. Total destruction of the tool when it ceases to cut.
2. A fixed size of wear land on tool flank. On carbide and ceramic tools, where crater wear is almost absent, tool life is taken as corresponding to 0.038 or 0.076 mm of wear land on the flank for finishing respectively.

As discussed above, tool wear and hence tool life depends on many factors. The greatest variation of tool life is with the cutting speed and tool temperature which is closely related to cutting speed. Tool temperature is seldom measured and much study has been done on the effect of cutting speed on tool life. Tool life decreases with increased V, the decrease being parabolic. To draw these curves, the cutting tools are operated to failure at different cutting speeds. In 1907, Taylor gave the following relationship between cutting speed and tool life,

$$VT^n = C \qquad \text{... (6.1)}$$

where V is the cutting speed), T is the time (min) for the flank wear to reach a certain dimension, *i.e.*, tool life, C is constant and n is an exponent which depends upon the cutting conditions. If cutting speed-tool life curves are plotted on a log-log graph, straight lines are obtained, (Fig. 6.19).

n is the negative inverse slope of the curve and C is the intercept velocity at $T = 1$. The results are valid only for the particular test conditions employed. Thus 'C' is the cutting speed for tool life of 1 min.

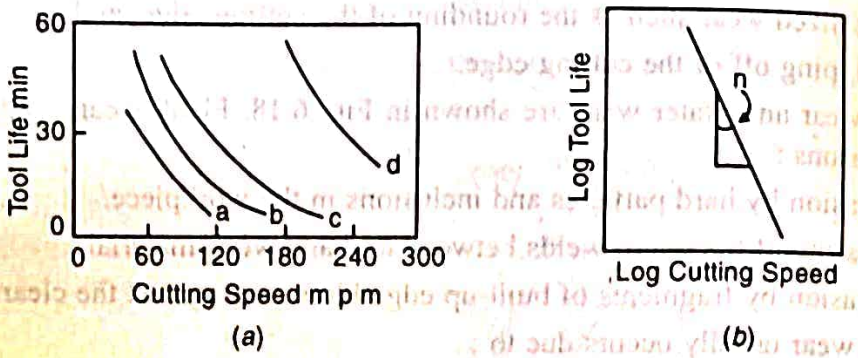

Fig. 6.19. Cutting Speed—Tool Life Curves.

The following values may be taken for 'n' :

n = 0.1 to 0.15 for *HSS* tools

= 0.2 to 0.4 for carbide tools

= 0.4 to 0.6 for ceramic tools

The tool life also depends to a great extent on the depth of cut d and feed rate per revolution, f. Assuming a logarithmic variation of C with d, the equation (6.1) can be written as,

$$VT^n \cdot d^m = C \quad \text{... (6.2)}$$

It has been seen that decrease of life with increased speed is twice as great (exponentially) as the decrease of life with increased feed.

Considering feed rate also, the general equation can be :

$$VT^n \cdot d^m \cdot f^x = C \quad \text{... (6.3)}$$

6.8.2. Variables Affecting Tool Life. Tool life is primarily affected by a high temperature in thin surface layers subject to wear. The variables affecting cutting temperature will also affect tool life. These variables are: workpiece material, tool material, cutting variables, tool geometry and cutting fluids. The effects of these variables on cutting temperature has already been discussed under Art. 6.7.1.

6.9. MACHINEABILITY

In spite of efforts by a number of investigators, so far there has been no exact quantitative definition of machineability. This is because of a large number of variables involved and their complexity. However, the major factors involved in metal cutting are : forces and power absorbed, tool wear and tool life, surface finish, dimensional accuracy and machining cost. These factors depend upon a large number of variables, such as properties of work materials, tool geometry, cutting conditions, machine tool rigidity etc. Due to this, it is impossible to combine these factors, so as to give a suitable definition for machineability. Many authors give a qualitative measure of machineability of a material as :

(1) the ease with which it could be machined,

(2) the life of tool before tool failure or resharpening,

(3) the quality of the machined surface, and

(4) the power consumption per unit volume of material removed.

However, in production, tool life is generally considered the most important factor and, so, most of the investigators have related machineability with tool life. Higher the tool life, the better is the machineability of a work material. The various materials have been given machineability ratings, which are relative. Supposing a material is given the rating of 100. Those materials which

have a better machineability will have higher ratings and those materials with lower machineability have a lower one.

According to one investigator, the machineability may be evaluated as given below :

1. Long tool life at a given cutting speed.
2. Lower power consumption per unit volume of metal removed.
3. Maximum metal removal per tool resharpening.
4. High quality of surface finish.
5. Good and uniform dimensional accuracy of successive parts.
6. Easily disposable chips.

The machineability rating or index of different materials is taken relative to the index which is standardised. The machineability index of free cutting steel is arbitrarily fixed at 100 per cent. For the other materials, the index is found as below :

$$\text{Machineability index, \%} = \frac{\text{Cutting speed of material for 20 min. tool life}}{\text{Cutting speed of free cutting steel for 20 min. tool life}} \times 100$$

The machineability indexes for some common materials are given below :

C - 20 steel = 65
C - 45 steel = 60
Stainless steel = 25

Table 6.3

Problems	Remedies and Satuters									
	Reduce the cutting speed	Increase the cutting speed	Reduce the feed	Increase the feed	Reduce the depth of cut	Increase the depth of cut	Select a more wear resistant Grade	Select a tougher grade	Select a smaller nose radius	Select a positive geometry
Flank Wear	✓									
Notch wear	✓						✓			
Cratering	✓						✓			
Plastic Deformation	✓		✓				✓			
Built-up edge (BUE)		✓	✓				✓			✓
Small cracks normal to the cutting edge										
Small cutting edge fracture (frittering)		✓						✓		
Insert Breakage			✓		✓			✓		✓
Curling of Long Chips				✓		✓		✓		
Vibrations	✓			✓					✓	
									✓	✓

Numerical of Compound Indexing

Indexing 141 divisions.

The first step in compound indexing is to factorise the number into suitable hole circle available in a single plate.

141 = 47 x 3

This can be achieved by using plate 3 with

47 hole circle, and

39 hole circle.

This means that 47 and 39 are the hole circle that have been identified for this indexing. The next step is to find the exact indexing required.

$$\frac{40}{N} = \frac{n_1}{N_1} \pm \frac{n_2}{N_2}$$

$$\frac{40}{141} = \frac{n_1}{39} \pm \frac{n_2}{47}$$

- **BROWN AND SHARP INDEX PLATE:**
- Plate no 1: 15,16,17,18,19,20.
- Plate no 2: 21,23,27,29,31,33.
- Plate no 3: 37,39,41,43,47,49.

BEST
MECHANICAL ENGINEERING

Numerical of Compound Indexing

$$\frac{n_1}{39} \pm \frac{n_2}{47} = \frac{40}{141}$$

$$47\ n_1 \pm 39\ n_2 = \frac{1833\ X\ 40}{141}$$

$$47\ n_1 \pm 39\ n_2 = 520$$

By trail and error method ,we get n_1 and n_2

$n_1 = 26$ and $n_2 = 18$

$$47 \text{ x } 26 - 39 \text{ x } 18 = 520$$

$$\frac{26}{39} - \frac{18}{47} = \frac{40}{141}$$

Hence, the indexing required is 26 holes in the 39-hole circle **subtracted** by 18 holes in the 47-hole circle to get 141 divisions.

Method 2

$$\frac{\text{Factors of divisions required x factors of difference of hole circles}}{\text{Factors of 40 x factors of first circle x factors of second circle}}$$

$$= \frac{141\ (47-39)}{40 \cdot 39 \cdot 47} = \frac{47 \cdot 3 \cdot 4 \cdot 2}{4 \cdot 10 \cdot 13 \cdot 3 \cdot 47} = \frac{2}{10 \cdot 13} = \frac{1}{65}$$

$$\frac{n_1}{39} + \frac{n_2}{47} = \frac{40}{141} \qquad \frac{65}{39} + \frac{65}{47} = \frac{40}{141} \qquad 3.04 = 0.283$$

$$\frac{n_1}{39} - \frac{n_2}{47} = \frac{40}{141} \qquad \frac{65}{39} - \frac{65}{47} = \frac{40}{141} \qquad 0.283 = 0.283$$

$$\frac{65}{39} - \frac{65}{47} = \frac{40}{141}$$

$$1\frac{26}{39} - 1\frac{18}{47} = \frac{40}{141}$$

BEST
MECHANICAL ENGINEERING

Numerical of Compound Indexing

Indexing 77 divisions.

The first step in compound indexing is to factorise the number into suitable hole circle available in a single plate.

77 = 11 x 7

This can be achieved by using plate 2 with

33 hole circle, and

21 hole circle.

This means that 33 and 21 are the hole circle that have been identified for this indexing. The next step is to find the exact indexing required.

$$\frac{40}{N} = \frac{n_1}{N_1} \pm \frac{n_2}{N_2}$$

$$\frac{40}{77} = \frac{n_1}{21} \pm \frac{n_2}{33}$$

- **BROWN AND SHARP INDEX PLATE:**
- Plate no 1: 15,16,17,18,19,20.
- Plate no 2: 21,23,27,29,31,33.
- Plate no 3: 37,39,41,43,47,49.

BEST
MECHANICAL ENGINEERING

Numerical of Compound Indexing

$$\frac{n_1}{21} \pm \frac{n_2}{33} = \frac{40}{77}$$

$$33\ n_1 \pm 21\ n_2 = \frac{693\ X\ 40}{77}$$

$$33\ n_1 \pm 21\ n_2 = 360$$

By trail and error method ,we get n_1 and n_2

$n_1 = 9$ and $n_2 = 3$

$$33 \times 9 + 21 \times 3 = 360$$

$$\frac{9}{21} + \frac{3}{33} = \frac{40}{77}$$

Hence, the indexing required is 9 holes in the 21-hole circle **added** to 3 holes in the 31 hole circle to get 77 divisions.

Method 2

$$\frac{\text{Factors of divisions required x factors of difference of hole circles}}{\text{Factors of 40 x factors of first circle x factors of second circle}}$$

$$= \frac{77 \cdot (33-21)}{40 \cdot 33 \cdot 21} = \frac{11 \cdot 7 \cdot 4 \cdot 3}{4 \cdot 10 \cdot 11 \cdot 3 \cdot 7 \cdot 3} = \frac{1}{10 \cdot 3} = \frac{1}{30}$$

$$\frac{n_1}{21} + \frac{n_2}{33} = \frac{40}{77} \qquad \frac{30}{21} + \frac{30}{33} = \frac{40}{77} \qquad 2.33 = 0.51$$

$$\frac{n_1}{21} - \frac{n_2}{33} = \frac{40}{77} \qquad \frac{30}{21} - \frac{30}{33} = \frac{40}{77} \qquad 0.51 = 0.51$$

$$\frac{30}{21} - \frac{30}{33} = \frac{40}{77}$$

$$1\frac{9}{21} - \frac{30}{33} = \frac{40}{77}$$

BEST

MECHANICAL ENGINEERING

Differential Indexing

Occasionally it is possible to come across a situation in which the desired number of divisions on the work piece cannot be obtained by simple indexing using the index plates available with the machine. Such jobs can be done by differential indexing.

Differential Indexing

In differential indexing, the index plate is made free to rotate.(For differential indexing the lock of the index plate is withdrawn so that the index plate is free to rotate)

A gear is connected to the back end of the dividing head spindle, while another gear mounted on a shaft of the index plate through bevel gear.

When index crank is rotated, the motion is communicated to the work piece spindle.

Since the work piece spindle is connected to the index plate through the intermediates gearing as explained above, the index plate will also start to rotating.

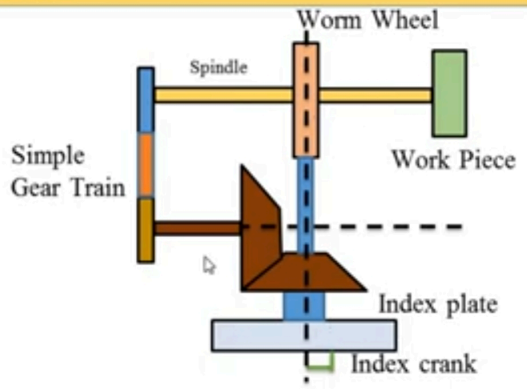

Differential Indexing

When the index crank is rotated to Index the W.P through a given angle the index plate slowly rotates either in the same direction or in opposite direction depending upon the gearing used.

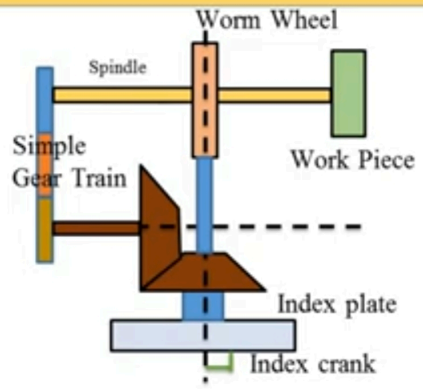

The indexing is done in the same way as in simple indexing but the rotation of the index plate relative to the index crank slightly changes the location of the hole to which the index crank pin is moving.

The movement of the index plate required for the differential indexing and the gears in the gear train from the spindle to plate shaft to obtain this movement can be calculated,

Differential Indexing

If the **chosen indexing is less than** the required one then the index plate will have to be moved in the **same direction** as the movement of the crank to add the additional motion.
If the **chosen indexing is more** then the plate should **move in the opposite** direction to subtract the additional motion.

The direction of the movement of the index plate depends upon the gear train employed.
If an idle gear is added between the spindle gear and the shaft gear in case of simple gear train then the index plate will move in the same direction to that of the indexing crank movement.
In the case of compound gear train, an idler is to be used in the case when the index plate is to move in the opposite direction.
The procedure of calculation is explained with the following example.
The change gear set available is
20,24,28,32,40,44,48,56,64,72,86,and 100

BEST
MECHANICAL ENGINEERING

Differential Indexing

Hence

N= Division to Required

n= Division assume or decided

$$\frac{\text{Number of teeth on spindle gear}}{\text{Number of teeth on gear on plate shaft}} = \frac{40(n-N)}{n}$$

If n>N which is indicated by a positive sign in the gear train $\frac{40(n-N)}{n}$

And the plate rotation should be in a direction opposite to that of index crack.

If n<N which is indicated by a negative sign in the gear train $\frac{40(n-N)}{n}$

BEST

MECHANICAL ENGINEERING

Numerical of Differential Indexing

Obtain the indexing for 97 divisions.

Required indexing is 40/97 which cannot be obtained with any of the index plates available. choose a nearest possible division.

For example, the indexing decided is $\frac{40}{100} = \frac{2}{5} = \frac{8}{20}$.

The actual indexing decided is 8 hole in a 20 hole circle. This indexing will be less than required. Ideally, the work piece should complete one revolution when the crank is moved through the 97 turns at the above identified indexing. Actual motion generated when the crank is moved 97 turns is

$$= \frac{40(n-N)}{100} = \frac{40\ X\ 3}{100}$$

Hence index plate has to move forward by this amount during the 97 turns to compensate for this smaller indexing being done by indexing crank. Hence, the gear ratio between the spindle and the index crank is

$$= \frac{40\ X\ 3}{100} = \frac{120}{100} = \frac{6}{5}$$

Numerical of Differential Indexing

$$= \frac{40\ X\ 3}{100} = \frac{120}{100} = \frac{6}{5}$$

Change gear set used is $\frac{Driven}{Driver} = \frac{6}{5} = \frac{24}{20} = \frac{48}{40}$

An idler gear is to be used since the index plate has to move in the same direction.

The change gear set available is
20,24,28,32,40,44,48,56,64,72,86,and 100

BEST
MECHANICAL ENGINEERING

Numerical of Differential Indexing

Obtain the indexing for 209 divisions.

Required indexing is 40/209 which cannot be obtained with any of the index plates available. choose a nearest possible division.

For example, the indexing decided is $\frac{40}{200} = \frac{4}{20}$ =0.2 $\frac{40}{209} = 0.1913$

The actual indexing decided is 4 hole in a 20 hole circle. This indexing will be more than required. Ideally, the work piece should complete one revolution when the crank is moved through the 209 turns at the above identified indexing. Actual motion generated when the crank is moved 209 turns is

$$= \frac{40(n-N)}{n} = \frac{40\,X\,(200-209)}{200} = \frac{40\,X\,(-9)}{200}$$

Hence index plate has to move **Reverse** by this amount during the 209 turns to compensate for this **larger indexing** being done by indexing crank. Hence, the gear ratio between the spindle and the index crank is

$$= \frac{40\,X\,9}{200}$$

BEST

MECHANICAL ENGINEERING

Numerical of Differential Indexing

$$= \frac{40\ X\ 9}{200} = \frac{9}{5}$$

Change gear set used is $\frac{Driven}{Driver} = \frac{72}{40}$

The change gear set available is
20,24,28,32,40,44,48,56,64,72,86,and 100

BEST
MECHANICAL ENGINEERING

Date 2/3/25
Page 1

most Imp Placement

* Manufacturing V/S Production :-

ex:-

Billet ← Raw material — Defined input

↓ convert — convert ↓ — ↓ convert

Bloom/ Slab/rectangular Black. — finished good — Defined output

=> Narrow term. => Broad term.

=> Economy consideration not there manufacturing. => Economy consideration is there

* classification of Manufacturing Process :-

Zero Process
→ Neither removal nor addition of mass takes place but shaping change occur.
ex:- forging, shaping, rolling etc.

Positive Process
→ Addition of Mass due to rivetting, Nut-bolting etc.
ex:- Joining Process.

Negative Process
→ removal of mass by machining.
ex:- All machining Process.

Regenerative
Rapid/Prototyping Process.
→ Layer by layer manufacturing.
ex:- mainly use in automobile sector.

* Machining :-

Machining is an essential Process of finishing by which Job are Produce into desired dimensional and surface finishing by gradual removal of excess material from preformed blank in the form of chip with the help of cutting tool make last the work surface.

:- Objective :- (i) Machining Aims to fulfill the functional required.
(ii) Improve its performance.
(iii) Prolanged the service time.

:- example :- cylinder of an IC engine subjected to fitting after some time of its regular use.

* classification of tool :- On the basis of number of major cutting edges :-
(i) Single point tool :- cutting point is one.
(ii) Double point tool :- cutting point is two.
(iii) Multipoint tool :- cutting point is two or more.

(i) single point tool :- eg :- turning tools, shaping tools, planning tool, slotting tool, parting tool, etc.

(ii) Double point tool :- eg :- Drilling tool.

(iii) Multi point tool :- eg :- Milling tool, Broaching tool, Reaming tool, saw, grinding, etc.

* single point tool Description :-
α => clearance angle / relief angle; t_c => chip thickness
α => Rake angle
ϕ => shear angle
ψ => lip angle / wedge ~~wedge~~ angle.
v => cutting velocity

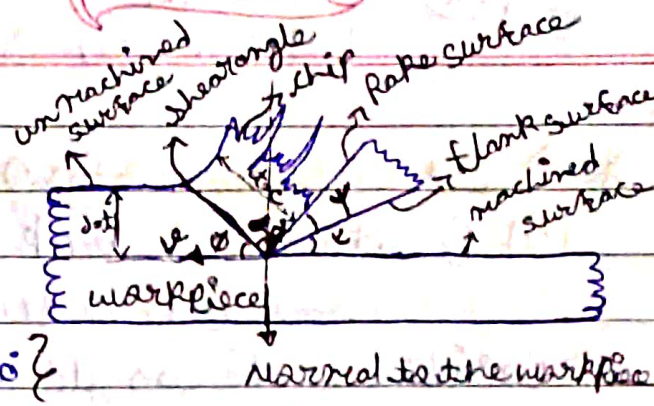

$d = t \Rightarrow$ Uncut chip thickness

$\gamma = \frac{t}{t_c}$:- chip thickness ratio

:- $\gamma < 1$ always.

$\{\alpha + \psi + \phi = 90°\}$

* (i) Rake angle (α):- Angle of inclination of Rake ~~angle~~ surface from reference plane i.e normal to the Horizontal machine surface.

⇒ It allows chip flow direction.

⇒ It produces sharpness to the cutting edges.

⇒ It reduces the cutting force, required to shear the work piece and hence reduces the power consumption.

⇒ It improve the surface finished.

⇒ It can be positive, Negative, Zero. (+/-/0).

*(ii) clearance angle (or) relief angle (ψ):- Angle of inclination of flank surface from the machined surface.

⇒ It reduces tool wear & friction.

⇒ It improve tool life.

⇒ It must be positive (+) ($3° - 15°$)

*(iii) lip angle / wedge angle (ψ):- It is the angle between rake and flank surface of the tool.
(knife edge angle)

⇒ It provide strength and Hardness to the tool.

⇒ It provide better heat dissipation to the tool.

HSS:- High speed steel is a Alloy steel ~~H~~ made up of tungsten, ~~[illegible]~~ chromium, Vanadium
18 : 4 : 1

Date 4/5/25
Page 4

18:4:1

~~(W) tungsten : chromium : vanadium (V)~~
(Cr)

* Discussion of an rake angle :-

(A) Positive (+) rake angle :- • reduce cutting force reduces cutting power.

=> Positive rake angle are recommended :-

(i) Machining low strength material.

(ii) low power machine.

(iii) low stiffness material.

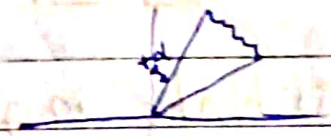

=> setup lacks strength and rigidity.

(B) Negative (−) rake angle :- It increase mechanical strength and thermal strength of the material.

=> It increase edge strength of the material.

=> It increase life of the tool required high cutting speed and high power.

=> Negative rake angle are recommended :-

(i) Machining high strength alloy.

(ii) high speed cutting.

(iii) with rigid machine setup.

(iv) when cutting tool material are ceramic and carbide.

(v) when cutting speed high.

most imp

* NOTE :- HSS:- High speed steel is a Alloy steel made up of tungsten chromium ~~[illegible]~~ and Vanadium in the Ratio of 18 : 4 : 1
W Cr V

* (C) Zero (0) rake angle :- increase tool strength.

=> Avoid Digging of tool into the workpiece.

⇒ To simplify the Design and manufacturing of the form tool.

⇒ for example :- (i) gear cutting in milling machine
(ii) thread cutting in lathe machine.

⇒ application :- (i) Brass is turned with zero rake angle.
(ii) generally cast iron tools are preffered with zero rake angle.

Material	Velocity	Temperature
i) HSS	~ 30 m/s	600°c
ii) carbide	~ 50 m/s	800 – 950°c
iii) ceramic	600 m/s	1300°c +

* Insert tool :- carbide and ceramic are brittle in nature hence they have less toughness as a result of which it will easily break due to impact load. therefore we come to the solution known as Insert.

Insert is nothing but fixing of carbide ~~tool~~ and cemantite tool on HSS shank with the help of an nut bolt arrangement.

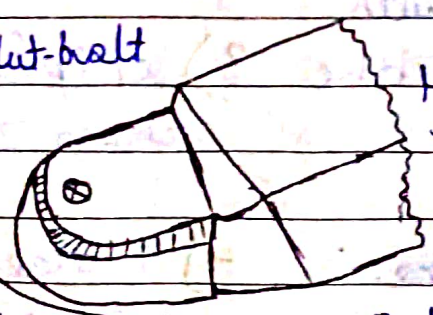

Brittle in nature
↓
Tensile strength less/
Toughness is less
↓
At high force or high velocity
↓
Break

At high force → It can't resist impact → Break → Bear the impact load. ↑ good in tensile strength

* Types of Machining :-

1) Orthogonal Machining :-

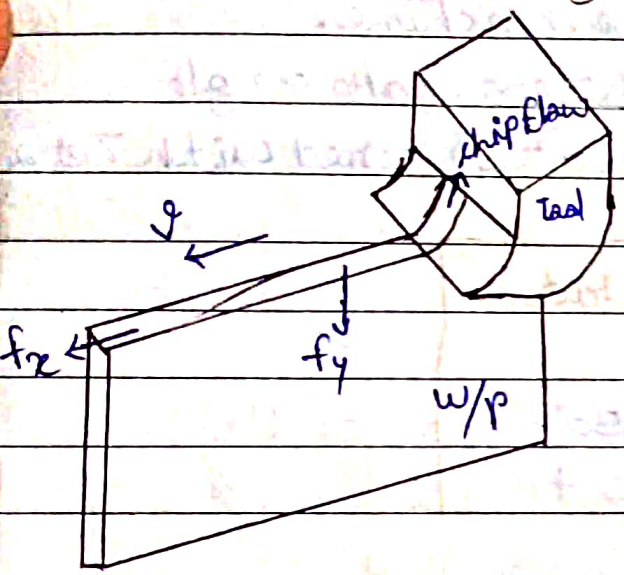

fig :- Orthogonal Machining

1) The cutting edge of the tool is perpendicular to the direction of cutting velocity.

2) The chip generated flow over the rake face of the tool with chip velocity perpendicular to the cutting edge.

3) chip flow angle is zero.

4) Only two component of cutting

2) Oblique machining :-

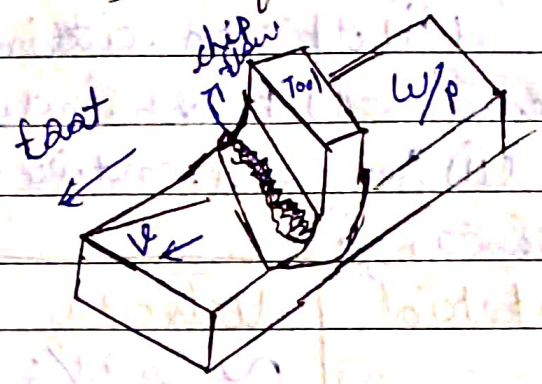

fig :- Oblique machining.

1) The cutting edge of the tool is inclied at an angle less than 90° (Acute angle) to the direction of cutting velocity.

2) The chip flow on the tool bar making an angle with the cutting edge.

3) chip flow angle is more than zero.

4) Three component of cutting force act on the tool which are mutually ⊥ to each other.

force act on the tool, which are mutually perpendicular to each other

5) The cutting edge is wider than the w/p width and extend beyond the w/p on either side. Also, the width of w/p is much greater than the depth of cut.

5) The cutting edge may or may not be wider the w/p width. Width of the ~~help~~ w/p may or may not greather than depth of cut.

* System of Description of tool geometry :-

(i) Machine Reference system :- ASA & ANSI
(ii) Tool Reference system :- ORS & NRS
(iii) Work Reference system :- WRS

ANSI :- American national standard institute
ASA :- American standard Association
} most used for description — Description
ORS :- orthogonal Rake system — calculation

—: Tool geometry :-

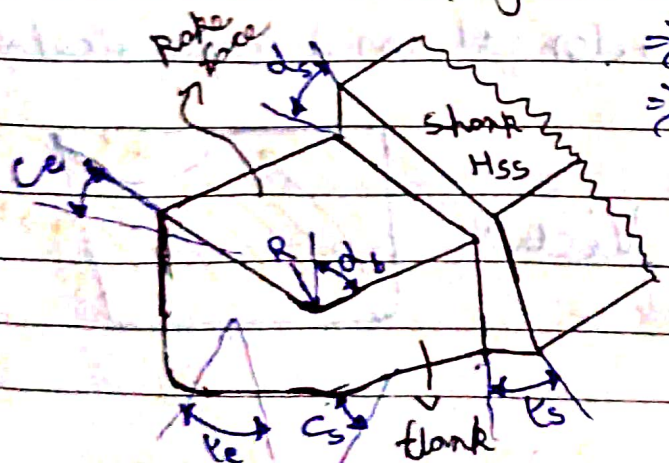

=> single point cutting tool
=> ASA system of tool Description

d_b = Back rake angle
d_s = side rake angle
Ce = end cutting edge angle

C_s = side cutting edge angle. α_s = side relief angle
α_e = End relief angle. R = Nose radius

Tool signature / Tool Designation :-

rake, relief & cutting side will come last. Finish Nose radius in inches.

α_b	α_s	α_e	α_s	C_e	C_s	R
8°	9°	4°	3°	15°	25°	4 inch

eg :-

$[C_s \leq 30°]$

Cutting using single point cutting tool can be affected by 6 angle & 1 nose radius of the tool. The arrangement of all these angle and nose radius in particular order is called tool Designation or nomenclature.

* cut section view of tool :-

- Front view :- Plane Parallel to width and Perpendicular to base.

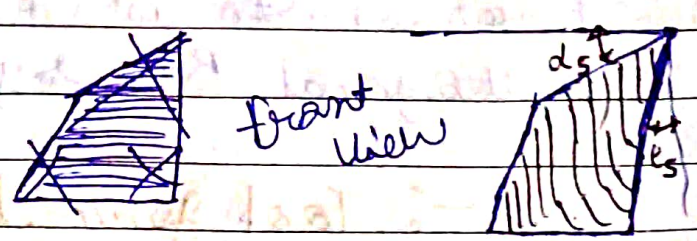

- side view :- Plane Parallel to length and Perpendicular to base & width.

Side View

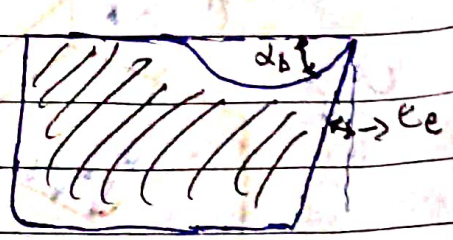

• Top View :- Plane Parallel to base and width and Perpendicular to ~~base or~~ length.

Top View

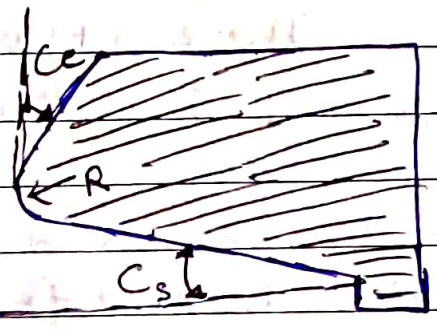

* ~~Bake~~ Back rake angle :- It is the angle between the face of the tool and base of the shank. and its usually/generally measured in a plane perpendicular to the base and parallel to the length. It affects the ability of the tool to shear the work material and form the chip.

In turning positive back rake angle takes the chip away from the machine surface were as Negative back rake angle direct the chip on to the machine surface.

* Side rake angle :- It is the angle between the face of the tool and base of the shank and is usually measured in a plane perpendicular to the base and parallel to the width.

In increase in side rake angle reduces the chip thickness in turning.

NOTE :- Positive back rake angle are generally used for soft and ductile material. were as Negative back rake angle are used for harder and brittle material.

* End relief angle :- It is the angle between the position of the end flank immediately below the end cutting edge and line drawn through this cutting edge perpendicular to the base is usually measured in a plane perpendicular to the base and parallel to the length.
=> It prevent friction of the flank of the tool.

* Side relief angle :- It is the angle between the position of the side flank immediately below the side cutting edge and a line drawn through this cutting edge perpendicular to the base it is usually measured in a plane perpendicular to the base and parallel to the width.

* End cutting edge Angle :- It is the Amount that end cutting edge slopes away from the Nose of tool, so that it will clear the finished surface on the workpiece. when cutting with side cutting edge.
=> It prevent the trailing end of the tool from rubbing against the workpiece.
=> The larger end cutting edge angle weakens the tool.
=> It is usually kept in between 8° to 15° (8-15 degrees).

* Side cutting edge angle :- It is the angle between the side cutting edge and longitudinal axis of the tool. It is the angle which prevent interference as the tool enters the work material. Normally kept in

between 15 to 30 degrees (15° – 30°).

(I)

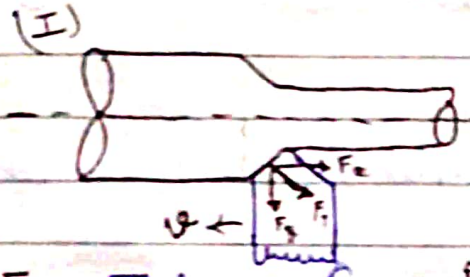

(II)

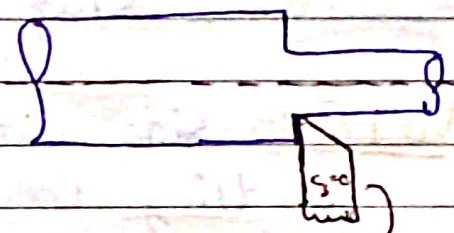

F_T = Thrust force → axial force

F_x = feed force = $F_T \cos C_s$ ↓

F_y = Radial force = $F_T \sin C_s$ ↑ → chattering action of tool.

forging and casting operated workpiece

C_s ↑ — width of chip ↑ — depth of cut ↓

CASE I :- when $C_s \neq 0$

here the tool will easily cut the material ie very smoothly and we obtained the regular surface.

CASE II :- when $C_s = 0$

here the tool will hit the work material and cut it as a result of which irregular surface is obtained.

⇒ large this angle, greater the component of force tending to separate the work and the tool these phenomena in tool is known as chattering of tool.

⇒ If C_s small then interference take place and is increased value it will have more of its length in action.

⇒ As the value of C_s is increased its results into thicker and wider chip it also lead to distribution of more amount of heat which result into less in of temperature as a result of which tool life will increase.

⇒ Zero side cutting edge angle is desirable when machining casting & forging with hard and scaly skin.

*NOTE :- side cutting edge angle has no influence on cutting power.

* Lead angle :- lead angle should be equal to side cutting edge angle in order to have smooth machining.
⇒ normally machining is based on lead angle.

* Lip angle :- Large lip angle permits machining of harder metal, allow as heavier Depth of cut, better head deciption, better tool life.

* Nose radius :- It is the curvature of the tool tip. It strength en the tool nose by reducing the stress concentration.
⇒ It increase the tool life.
⇒ It provide better surface finish.
⇒ It optimum value / nominal value must be 0.2 - 1.2m
⇒ large nose radius may induce / produce chattering effect.

⇒ $h = \frac{f^2}{8R_N}$ h = surface roughness.
f = feed.
R_N = Nose radius.

* Orthogonal rake system :-

$i \quad \alpha \quad \gamma \quad \gamma_1 \quad C_e \quad \lambda \quad R$ mm

$\boxed{\lambda \geq 60^\circ}$ Imp.

$\boxed{\lambda + C_s = 90^\circ}$ most Imp.

$\boxed{C_s \leq 30^\circ}$ Imp.

i = inclination Angle
α = orthogonal Rake Angle
γ = side relief angle
γ_1 = end relief angle
C_e = End cutting edge angle
λ = Principle cutting edge angle / Approach angle
R = Nose Radius (mm)

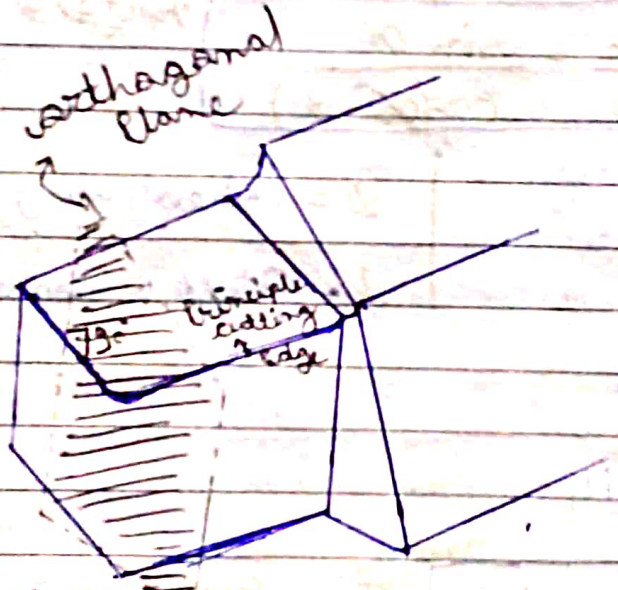

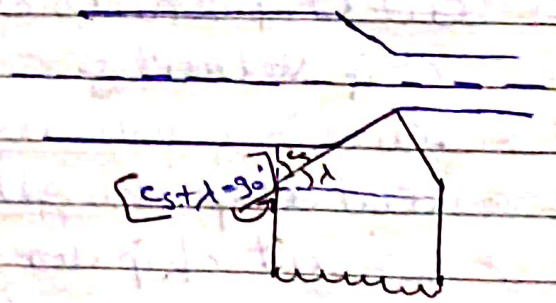

:- orthogonal plane :-
Plane perpendicular to the principle cutting edge.

* # NOTE :- In case of orthogonal cutting the value of inclination angle ($i = 0$) is equal to 0. where as an oblique cutting ($i \neq 0$)

* Inter conversion between ASA & ORS :-

$$\begin{bmatrix} \tan \alpha_s \\ \tan \alpha_b \end{bmatrix} = \begin{bmatrix} \sin\lambda & -\cos\lambda \\ \cos\lambda & \sin\lambda \end{bmatrix} \begin{bmatrix} \tan \alpha \\ \tan i \end{bmatrix}$$

$$\begin{bmatrix} \tan \alpha \\ \tan i \end{bmatrix} = \begin{bmatrix} \sin\lambda & \cos\lambda \\ -\cos\lambda & \sin\lambda \end{bmatrix} \begin{bmatrix} \tan \alpha_s \\ \tan \alpha_b \end{bmatrix}$$

$\tan \alpha_s = \sin\lambda \tan\alpha - \cos\lambda \tan i$

$\tan \alpha_b = \cos\lambda \tan\alpha + \sin\lambda \tan i$

$\tan \alpha = \sin\lambda \tan\alpha_s + \cos\lambda \tan\alpha_b$

$\tan i = -\cos\lambda \tan\alpha_s + \sin\lambda \tan\alpha_b$

* Shear angle Relationship :-

$$\boxed{\gamma = \frac{t}{t_c} = \frac{V_c}{V} = \frac{l_c}{l} = \frac{\sin\phi}{\cos(\phi - \alpha)}}$$ most Imp

t = Uncut chip thickness

t_c = ~~cut~~ Chip thickness

V_c = chip velocity

V = cutting velocity

l_c = cut chip length

l = un cut chip length

ϕ = shear angle.

α = Orthogonal Rake angle.

$$\boxed{\tan\phi = \frac{\gamma \cos\alpha}{1 - \gamma \sin\alpha}}$$ Imp. Imp. Imp. Cromesh Ji formula

:- Orthogonal cutting :- Assumption

$$\boxed{\text{Volume}/_{\text{initial}} = \text{Volume}/_{\text{final}} \quad l \times b \times t = l_c \times b_c \times t_c}$$

:- Sine law :-

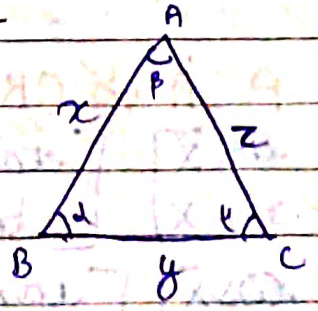

$$\boxed{\frac{x}{\sin\gamma} = \frac{y}{\sin\beta} = \frac{z}{\sin\alpha}}$$

Sine law

* Velocities in Orthogonal Metal cutting :-

↳ Velocity Δ relationship

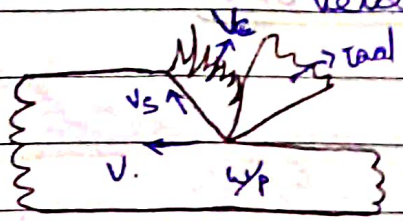

V_c = chip velocity
V = cutting velocity
V_s = shear velocity

Cutting velocity :- The velocity of the tool relative to the workpiece is called cutting velocity.

Shear velocity :- The velocity of the chip relative to workpiece is called shear velocity.

chip velocity :- The velocity of the chip relative to tool is called chip velocity.

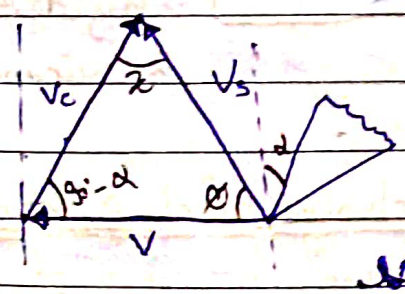

$$x + 90^\circ - \alpha + \phi = 180^\circ$$
$$x - \alpha + \phi = 90^\circ$$
$$x = 90^\circ + \alpha - \phi$$
$$\boxed{x = 90^\circ - (\phi - \alpha)}$$

sine law :-

$$\frac{V_s}{\sin(90^\circ - \alpha)} = \frac{V_c}{\sin\phi} = \frac{V}{\sin(90 - (\phi - \alpha))}$$

$$\boxed{\frac{V_s}{\cos\alpha} = \frac{V_c}{\sin\phi} = \frac{V}{\cos(\phi - \alpha)}}$$

* cutting shear strain :-

$$\boxed{\gamma = \cot\phi + \tan(\phi - \alpha)}$$

(or) $$\boxed{\gamma = \frac{1}{\tan\phi} + \tan(\phi - \alpha)}$$

The magnitude of strain that ~~dotept~~ develop along the shear ~~strain~~ plane to the machining action is called cutting shear strain.

* Rate of shear strain :- Rate of in Primary shear ~~load~~ zone the metal piece flow like fluid hence rate of shear strain come under Primary shear zone.

$$\boxed{\dot{\gamma} = \frac{\partial \gamma}{\partial t} = \frac{V_s}{\text{Thickness of Primary shear plane}}}$$

(unit = second^{-1})

→ By default 25 micons

V_s = shear velocity

* Analysis of metal cutting :- Merchant circle Diagram (MCD)

:- Assumption :- 1) Orthogonal metal cutting
~~2) In order to~~
2) continous chip without buildup edge is produce.
3) cutting velocity remains constant.
4) chip behave as free body in stable equilibrium under the action of two (2) equal and opposite colinear forces.

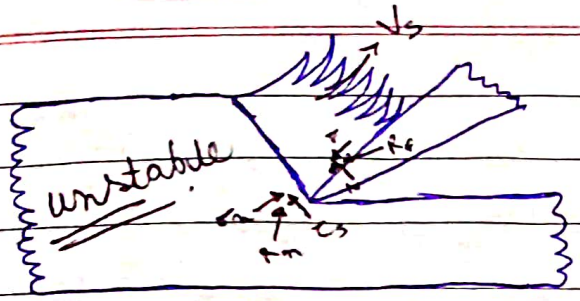

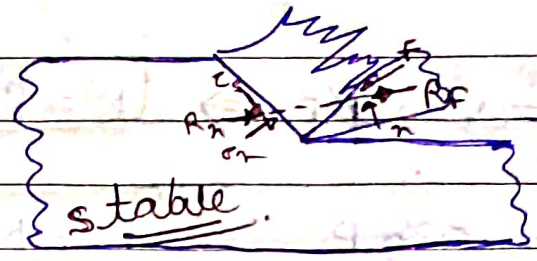

τ_s = shearing

σ_n = Normal stress

R_n = Resultant for τ_s and σ_n

R_f = Resultant for Friction and normal.

$$F_s = \tau_s \times \frac{bt}{\sin\phi}$$

$$F_s = \tau_s \times A_s$$

$$F_n = \sigma_n \times A_n$$

$$A_s = b \times \frac{t}{\sin\phi}$$

$$F_n = \sigma_n \times \frac{bt}{\sin\phi}$$

$\sin\phi = t/x$

$x = t/\sin\phi$

:- cutting करते समय 6 forces लगते हैं :-

F = friction force

N = Normal force

F_c = cutting force

F_T = Thrust force

F_s = shear force.

F_n = shear normal force.

β = friction angle

$x + 90 - \beta + \alpha = 90$

$$x = \beta - \alpha$$

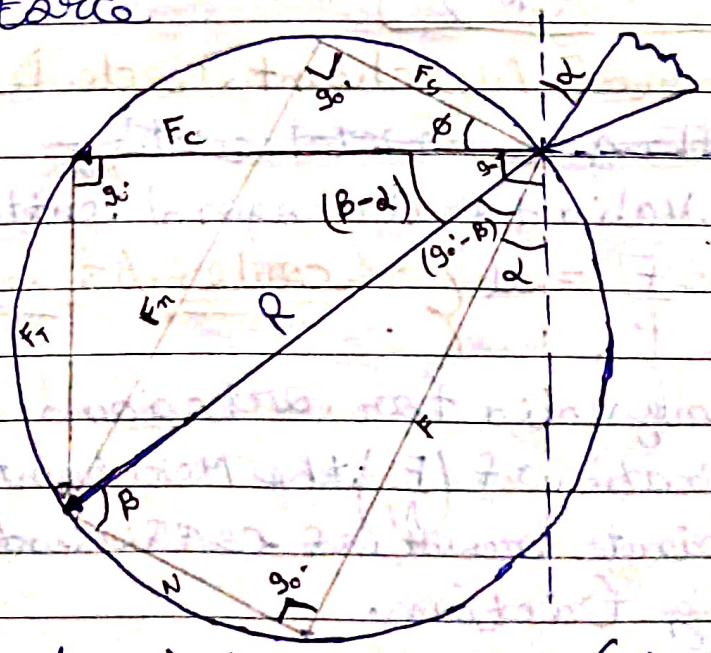

fig:- Merchant circle Diagram (MCD)

sliding friction
sticking friction } [$\mu > 1$]

$\frac{F}{R} = \sin\beta \Rightarrow \boxed{F = R\sin\beta}$

$\frac{N}{R} = \cos\beta \Rightarrow \boxed{N = R\cos\beta}$

$\frac{F_T}{R} = \sin(\beta-\alpha) \Rightarrow \boxed{F_T = R\sin(\beta-\alpha)}$

$\frac{F_C}{R} = \cos(\beta-\alpha) \Rightarrow \boxed{F_C = R\cos(\beta-\alpha)}$

$\frac{F_n}{R} = \sin(\phi+\beta-\alpha) \Rightarrow \boxed{F_n = R\sin(\phi+\beta-\alpha)}$

$\frac{F_s}{R} = \cos(\phi+\beta-\alpha) \Rightarrow \boxed{F_s = R\cos(\phi+\beta-\alpha)}$

$\boxed{\mu = \tan\beta = \frac{F}{N}}$ μ = coefficient of friction

$\boxed{\beta = \tan^{-1}\left(\frac{F}{N}\right)}$

* Limitation of Merchant circle Diagram:-

1) ~~Orthogonal metal cutting~~.

2) Only valid for Orthogonal cutting.

3) $\left\{\tan\beta = \frac{F}{N} = \mu\right\}$:- coulomb friction

3) MCD is only valid for ortogonal cutting.

2) By the ratio of $\left(\frac{F}{N}\right)$ the Merchant circle Diagram gives approximate result of coefficient of friction (μ) (i.e) sticking friction.

* Force Relation :-

याद करने का तरीका
Cs वाले - ΣCs ने नौकरी का सपना देखा है।

$$F = F_c \sin\alpha + F_T \cos\alpha$$
$$N = F_c \cos\alpha - F_T \sin\alpha$$
$$F_s = F_c \sin\phi + F_T \cos\phi$$
$$F_s = F_c \cos\phi - F_T \sin\phi$$

* Power Relation :-

$$\text{Power} = \text{Shearing Power} + \text{Friction Power}$$

{Power = Force × Velocity}

$$F_c \times V = F_s \times V_s + F \times V_c$$

F_c = cutting force
F_s = shear force
F = friction force

:- % of Power required to shear :-

$$\left[\frac{\text{Shearing Power}}{\text{Total Power}} = \frac{F_s \times V_s}{F_c \times V}\right]$$

:- % of Power required to overcome friction :-

$$\left[\frac{\text{friction Power}}{\text{Total Power}} = \frac{F \times V_c}{F_c \times V}\right]$$

Q. A single point cutting tool with 12° rake angle is used to machine a steel workpiece. the Depth of cut is 0.81 mm. The chip thickness under orthogonal machining is 1.8 mm. The shear angle is approximately ?

Sol, given $\alpha = 12°$

DOC $D = 0.81$ mm

$t_c = 1.8$ mm

$\tau \phi = ?$

$$\left\{ \tan\phi = \frac{r \cos\alpha}{1 - r \sin\alpha} \right\} \quad \left\{ r = \frac{t}{t_c} \right\}$$

$$r = \frac{0.81}{1.8}$$

$$\phi = \tan^{-1}\left(\frac{0.45 \cos(12)}{1 - 0.45 \sin(12)} \right) \quad [r = 0.45]$$ Ans.

$$[\phi = 25.90°]$$ Ans.

(or) $[\phi = 26°]$ Ans

Q. During pure orthogonal turning operation of a hollow cylindicular ~~tube~~ Ø it is found that the thickness of the chip produce is 0.5 mm. The feed given to the 0° rake angle tool is 0.2 mm per revolution. The shear strain produce during the operation is :-

Sol, given $t_c = 0.5\,mm$

$\alpha = 0°$

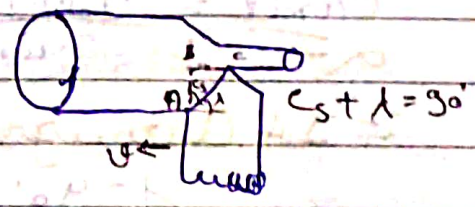

$d = b = \sin\lambda = 1$

$t = f = \sin\lambda = 1$

$t = 0.2\,mm/revolution$

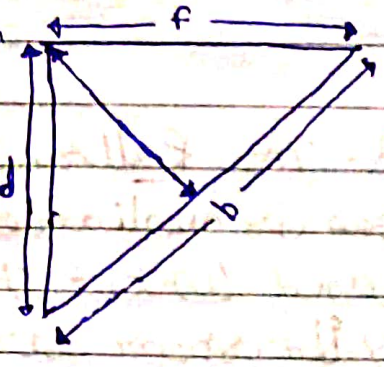

Note :- Unit of feed got change after conversion.

$\left\{ \frac{mm}{rev^n} \rightarrow mm \right\}$

$\left\{ \gamma = \frac{t}{t_c} \right\}$

$\gamma = \frac{0.2}{0.5}$ $[\gamma = 0.4]$ Ans.

$\left\{ \tan\phi = \frac{\gamma\cos\alpha}{1 - \gamma\sin\alpha} \right\}$

$\phi = \tan^{-1}\left(\frac{0.4\cos 0}{1 - 0.4\sin 0}\right)$ $[\phi = 21.80°]$ Ans.

$\left\{ k = \frac{1}{\tan\phi} + \tan(\phi - \alpha) \right\}$

$k = \frac{1}{\tan(21.80)} + \tan(21.80 - 0)$

$[k = 2.90]$ Ans.

Note :- In orthogonal m/c $[\lambda = 90°]$ $\therefore$ $[d = b, t = f]$

* Material removal rate / ~~or MRR~~ Metal removal rate :-

$$\boxed{MRR = A_c \times v}$$

A_c = cross section area of the uncut chip
v = cutting velocity.

* main formula

$$\boxed{MRR = \underset{mm}{b} \times \underset{mm}{t} \times \underset{mm/min}{v}}$$

$$\left\{ \text{unit} = \frac{mm^3}{min} \right\}$$

:- If Orthogonal machining :-

$\alpha = 90°$; $t = f$

$d = b$

$$\boxed{MRR = f d v} \quad mm^3/min$$

Q. The following data from the orthogonal ~~test~~ cutting test ~~is~~ is available. Rake angle 10° chip thickness ratio 0.35 and uncut chip thickness 0.51 mm width of cut 3 mm Yield shear stress of work material 285 N/mm² mean friction coefficient of tool face 0.65. Determine cutting force, radial force, normal force and ~~an~~ tool ~~or~~ shear force?

Sol, Given

$\alpha = 10°$

$\gamma = 0.35$

$t = 0.51 mm$

$b = 3 mm$

$\tau_{yt} = 285 N/mm^2$

$\mu = 0.65$

$F_c = ?$

$F_s = ?$

$N = ?$

radial force ?

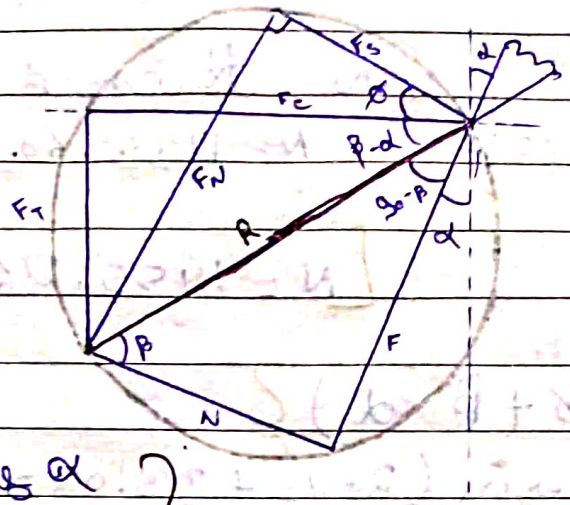

$\{\mu = \tan\beta\}$

$\tan^{-1}(\mu) = \beta$

$\beta = \tan^{-1}(0.65)$

$[\beta = 33.02^\circ]$ Ans.

$\left\{\tan\phi = \dfrac{\gamma\cos\alpha}{1-\gamma\sin\alpha}\right\}$

$\phi = \tan^{-1}\left(\dfrac{0.35\times\cos(10)}{1-0.35\times\sin(10)}\right)$

$[\phi = 20.15^\circ]$ Ans.

$\left\{F_S = \tau_{YT}\times\dfrac{bt}{\sin\phi}\right\}$ $\Rightarrow F_S = 285\times\dfrac{3\times0.51}{\sin(20.15)}$

$[F_S = 1265.82\,N]$ Ans.

$\{F_S = R\cos(\phi+\beta-\alpha)\}$

$R = \dfrac{F_S}{\cos(\phi+\beta-\alpha)}$ $\Rightarrow R = \dfrac{1265.82}{\cos(20.15+33.02-10)}$

$[R = 1735.60\,N]$ Ans.

(i)

F_c, F_T & R (Δ)

$\{F_T = R\sin(\beta-\alpha)\}$ $\{F_c = R\cos(\beta-\alpha)\}$

$F_T = 1735.60\times\sin(33.02-10)$ $F_c = 1735.60\times\sin(33.02-10)$

$[F_T = 678.71\,N]$ Ans $[F_c = 1597.39\,N]$ Ans

ΔFNR

$\{F = R \sin\beta\}$

$F = 1735.60 \times \sin(33.02)$

$[F = 945.78\,N]$ Ans

$\{N = R \cos\beta\}$

$N = 1735.60 \times \cos(33.02)$

$[N = 1455.26\,N]$ Ans.

$\{F_N = R \sin(\phi + \beta - \alpha)\}$

$F_N = 1735.60 \times \sin(20.15 + 33.02 - 10)$

$[F_N = 1187.43\,N]$ Ans

* Note :- Value of radial force is 0 (zero) since force always exceed in turning operation only but here in question orthagonal cutting is mention there for the value of Radial force is zero. $\{F_y = 0\}$

* Turning :-

F_x = feed force / Axial force.

F_y = Radial force / Thrust force.

F_z = cutting force / Tangential force.

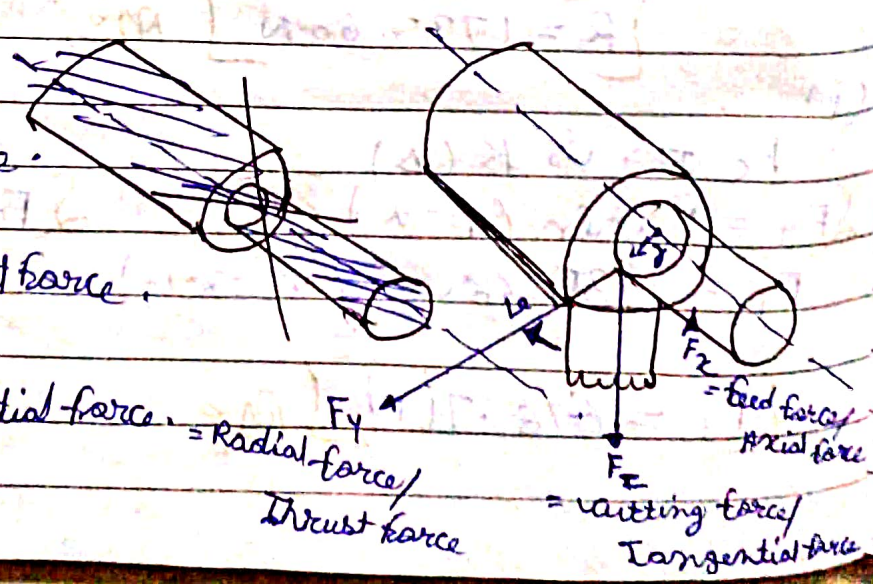

{Power required to feed = feed force × feed velocity}

(F) feed = $\frac{mm}{rev}$ $\quad F \times N = \frac{mm}{\cancel{rev}} \times \frac{\cancel{rev}}{min}$

$\left[F \times N = \frac{mm}{min}\right]$ feed velocity

formula $[P_F = F_x \times F \times N]$

{Power required to cutting = cutting force × cutting velocity}

formula $[P_c = F_z \times v]$

{Power required to Radial = Radial force × Radial velocity}

formula $[P_R = F_y]$ $\quad \boxed{P_R \cong 0}$ value

Q. A 125 mm long, 10 mm diameter stainless steel rod is being turned to 9 mm diameter, 0.5 mm depth of cut the spindle rotates at 360 rpm with the tool traversing at an axial speed of 175 mm/min, the metal removal rate is nearly :- (a) 2200 mm^3/min (b) 2400 mm^3/min (c) 2600 mm^3/min (d) 2800 mm^3/min ?

Sol, given $= 125$ mm

initial $d_1 = 10$ mm

final $d_2 = 9$ mm

DOC $= d = t = 0.5$ mm

$N = 360$ rpm

$f_x = 175$ mm/min

* chip formation :- cause of chip formation :-

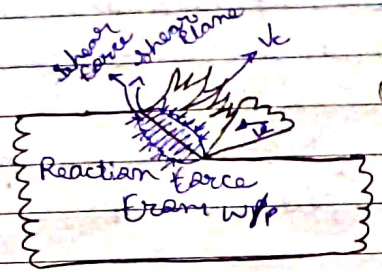

Ductile → shear velocity

Brittle → Brittle fracture

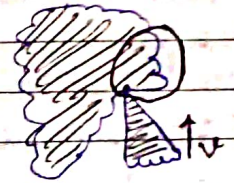

* Ductile material :- Material almost subjected compression. and because of compression shear stress developed on the shear plane as a result of which crystal structure brakes. An in this way chip formation occure in the ductile material.

* Brittle material :- Due to application of load generation fracture take place in the material and as soon as cutting force from the tool increases the fracture riches to the ultimated point as a result of which material got detach from the workpiece ~~as~~ hence remove as a chip.

* Types of chip :- (i) continous chip → Ductile material
(ii) Discontinous chip
(iii) Continous chip with Build up edge.
(iv) serrated chip.

* Machining Parameters :- (1) feed ⇒ large
(2) Depth of cut ⇒ large
(3) cutting velocity ⇒ high
(4) Rake angle = negative
(5) cutting fluid ⇒ Absent

:- condition for formation of Discontinous chip :-
→ (i) Regular shape & size. → Ductile material + work hardened. (SSC, RRB)
→ (ii) Irregular shape & size. → Brittle material (grey cast Iron) (JE)

* NOTE :- Ductile material + Multipoint cutter tool = regular shape discontinous chip.
↳ JE, SSE, RRB

* NOTE :- In multipoint cutter we always have discontinous chip formation.
:- for example :- milling, broaching operation.

* NOTE :- Brittle material never from continous chip since Its cracks. In the same way Brass, A soft Ductile material if machine then never produce Discontinous chip.

* condition for formation with continous chip with Bulid up edge :- (i) work Material is Ductile.
(ii) cutting velocity is high.
(iii) feed is low.
(iv) rake angle is positive and high.
for bulid up edge formation cutting velocity and feed must be medium or low and with that cutting fluid is Absent / inadequate (Insufficient).

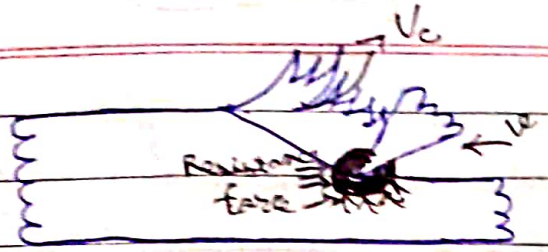

→ In machining ductile material with long chip tool contact length lot of stress & temperature develops in the secondary deformation zone at the chip tool interface.

→ Under such high stress & temperature in between two clean surfaces of metals, strong bonding may locally take place due to adhesion similar to welding.

→ Such bonding will be encourage & accelerated if the chip tool materials have mutually affinity or solubility.

→ The weld material starts forming as an embrya at the most favorable location & thus gradually grows.

→ With the growth of the Build up edge the force all gradually increased due to welding action of the tool tip along with the Build up edge formed on it.

→ When ever the force exceeds the bonding force of Build up edge, the Build up edge is broken & should off & taken away by the flowing chip. Than again starts forming & grow.

-> Low cutting speed also contributes to the formation of Build up edge. (milling, threading etc).

It is because of high contact time between tool & chip which leads to information.

~~Forced~~ (1) cutting speed too high

follows (2) Poor surface finish on the cutting face to the tool

(3) wornor incorrectly ground cutting tool.

(4) formation of the buildup edge on cutting face to the tool

(5) fricition between tool & workpiece.

* Elemination of Build up Edge :-

(i) Feed and Depth of cut is Decreased.

(ii) cutting Velocity is increased.

(iii) Rake angle is increased.

(iv) cutting fluid is increased.

* Effect of build up edge formation :-

(a) good effect :- build up edge protect the cutting edge of the tool is increase the tool life but marginary.

(b) harmfull effect :- (i) Poor surface finish.

• When we are machining ductile than it generates serrated chip.

iii) reduction of rake angle at the tool tip. which power consumption increases.

Q. An orthogonal turning operation is carried out at 20 m/min cutting speed using a cutting tool of rake angle 15° The chip thickness is 0.4 mm and the uncut chip thickness 0.2 mm?

Sol/ given $V = 20\ m/min$

$\alpha = 15°$

$t_c = 0.4\ mm$ $\quad V_c = ?$

$t = 0.2$ $\quad V_s = ?$

$$\left\{ r = \frac{t}{t_c} \right\} = \frac{0.2}{0.4} \quad [r = 0.5] \text{ Ans.}$$

$$\left\{ r = \frac{V_c}{V} \right\} = V_c = V \times r \Rightarrow V_c = 20 \times 0.5$$

$$[V_c = 10\ m/min] \text{ Ans}$$

$$\left\{ \tan\phi = \frac{r\cos\alpha}{1 - r\sin\alpha} \right\} \Rightarrow \phi = \tan^{-1}\left(\frac{0.5\cos(15)}{1 - 0.5\sin(15)}\right)$$

$$[\phi = 29.01°] \text{ Ans.}$$

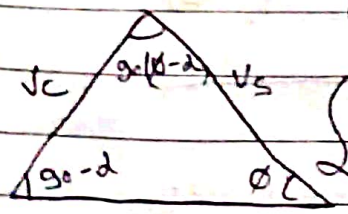

$$\left\{ \frac{V_c}{\sin\phi} = \frac{V_s}{\cos\alpha} = \frac{V}{\cos(\phi - \alpha)} \right\}$$

$$V_s = \frac{V_c \times \cos\alpha}{\sin\phi} \qquad V_s = \frac{10 \times \cos(15°)}{\sin(29.01)}$$

$V_s = 19917.54\ mm/min$

$V_s = 331.9591\ mm/sec$

$$[V_s = 19.917\ m/min] \text{ Ans.}$$

Q. An orthogonal cutting operation is being carried out under the following condition cutting speed = 2 m/sec, depth of cut = 0.5 mm, chip thickness = 0.6 mm. Then the chip velocity is :-

Sol, given $V = 2\ m/sec$

$t = d = 0.5\ mm$ $\quad V_c = ?$

$t_c = 0.6\ mm$

$$\left\{ r = \frac{t}{t_c} \right\} = \frac{0.5\ mm}{0.6\ mm} \Rightarrow [r = 0.5333] \text{ Ans}$$

$$\left\{ r = \frac{V_c}{V} \right\} = V_c = V \times r \Rightarrow 2 \times 0.5333$$

$$[V_c = 1.6666\ m/sec] \text{ Ans.}$$

* Thermal Aspects in Machining :-

(or) chip formation :-

1) Shear zone / Primary zone
2) Friction zone
3) Work - tool contact zone

→ heat generation zone

q_1 = Heat generated in shear zone

q_2 = —— // —— friction zone

q_3 = —— // —— work tool contact zone

Heat balance :-

Total Head generated = (amount of heat ~~generated~~ created by the chip) + (Amount of heat remaining the cutting tool)

~~cutting~~

⇒ 80 : 10 : 10 :

Most Imp

⇒ + (Amount of heat in the Rasing) + (Amount of heat is radiate to surrounding)

Factor affecting cutting temperature :-

✓ * Heat distribution chart :-

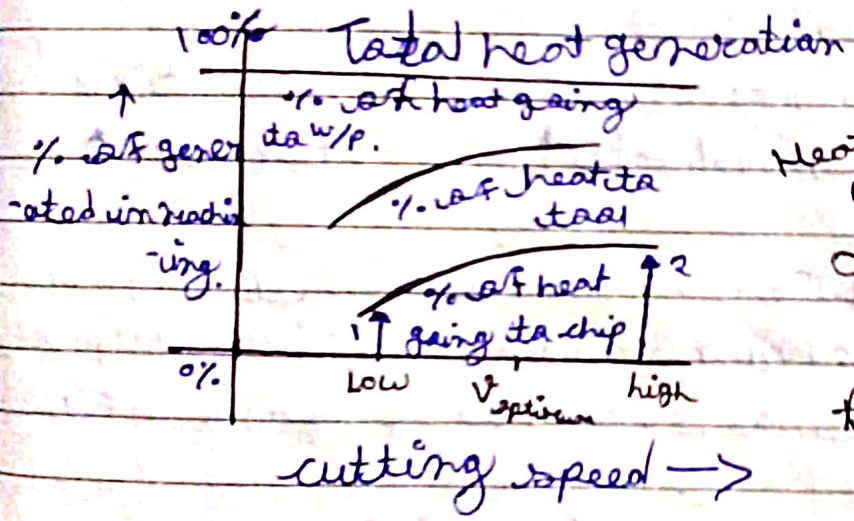

Heat distribution ratio of percentage.

{ chip : tool : workpiece
80% : 10% : 10% }

fig :- Heat distribution chart

* Flank wear :- Effect :- Flank wear directly affect the component dimension produced (out of tolerance zone).

Therefore flank wear is usually the most common determinant of tool life.

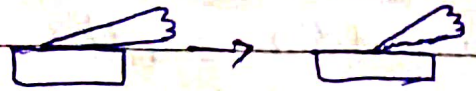

$$\boxed{\text{Tool life} \propto \frac{1}{\text{Flank wear}}}$$

* Crater wear / Rake wear :- for crater wear, temperature is main culprit & tool dissolves into the chip material (Diffusion Process).

→ ∵ Max^m temp^r over tool rake face is at some distance from the tool tip & hence crater wear is occur

at some distance from the tool tip.

So for diffussion to occur, high temp$^{\circ}$ is prime requirement & for ~~temp~~ high temp$^{\circ}$, high velocity & material (Ductile) that is able to produce continous chip.

Therefore crater wear is predominating in high cutter speeds.

crater depth increase linearly with time.

→ ∵ (MRR) material removal rate ↑ – crater wear ↑.

* Tool Life :- Tool life criteria can be defined as the predetermined numerical value of any type of tool deteriaration which can be measured by same of the following ways.

(a) Actual cutting time to failure → T = 40 minutes
(b) Volume of metal removed → 200 m^3 (chip's volume)
(c) Number of parts produced → 100 units
(d) cutting speed for a given time → 20 meter/minute.

* Tool Failure :- Tool failure is two types :-
1) Slow Depth. 2) sudden Depth.

1) slow Depth :- Gradual or progressive wearing away of rake face (Rake / crater wear) or flank (Flank wear) of the cutting tool ~~tool~~ or both.

→ Hence able to machine large no. of workpiece before tool failure & therefore have high useful life.

2) Sudden Depth:- failure Leading to Premature End of the tool.

But the reason for it is still unknown since the mechanism of tool failure is difficult to predict but still some are the valid reason given by the researchers:-

(a) Elastic deformation → Tends to change the angles
(b) Brittle fracture → (crack)
(c) fatigue fracture
(d) edge chipping → Removal/breakon out of edge.

Sudden depth mainly seen on the notch hence known as notch wear i.e A wide & deep groove is formed to develop on the principal flank at the outer end of the main cutting edge such notch is caused mechanically by the sharp hardened work surface in contact with the outer end of the main cutting edge.

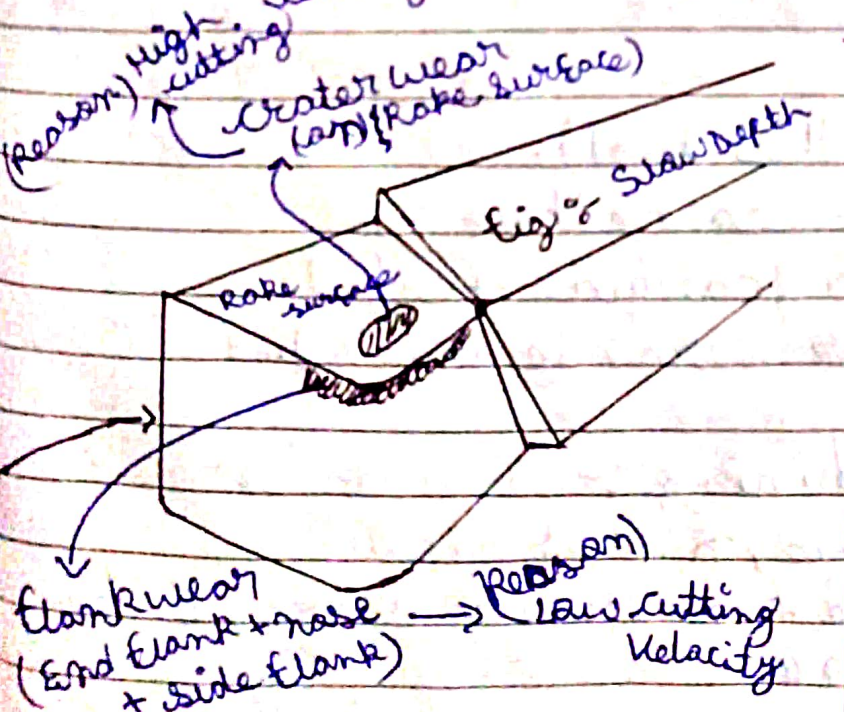

Fig No 33 Ka Answer Mahai.

* Stages of flank wear:-

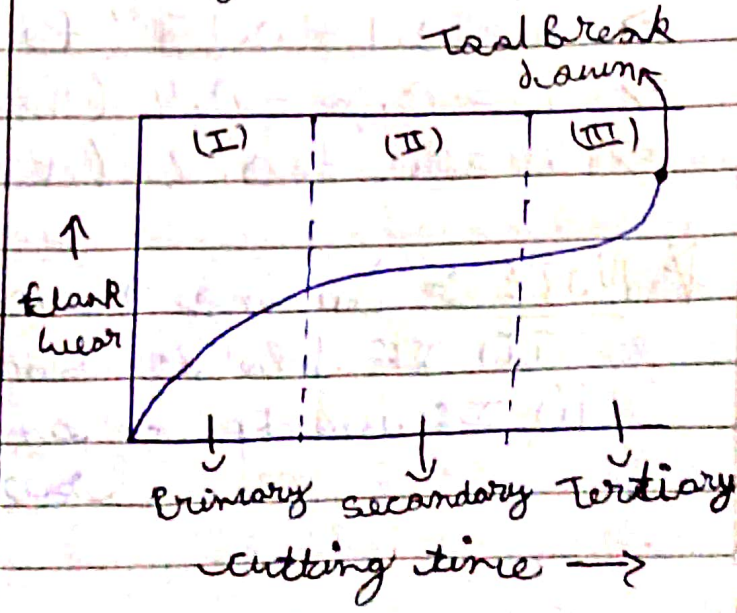

* Taylor's tool life :- Tool life criteria can be defined as A pre determined numerical value of any type of tool deterioration which can be measured
1) Actual cutting time to failure.
2) Volume of metal removed.
3) Number of parts produced.
4) cutting speed for a given time.
5) Length of work machined.

Based on flank wear $[VT^n = C]$ Taylor's tool life eqn

where, V = cutting speed (in m/min).
T = Time (in min).
n = exponent based on tool material.
C = constant based on tool and work material on cutting condition.

SSC JE.

Value of n :-
⇒ n = 0.08 – 0.2 (for HSS tool).
⇒ n = 0.1 – 0.15 (for cast alloy).
⇒ n = 0.2 – 0.4 (for carbide tools).
⇒ n = 0.5 – 0.7 (for ceramic tools).

* NOTE :- During machining :-
(i) If tool is same, n is same.
(ii) If workpiece and condition is same, C is same.

Q. In a machining test a cutting speed of 100 m/min indicates the tool life as 16 min and a cutting speed of 200 m/min indicates the tool life as 4 min. the value n and C are :-

Sol, given

$V_1 = 100$ m/min

$T_1 = 16$ min

$V_2 = 200$ m/min

$T_2 = 4$ min

A & B

(i) – { Tool same ⇒ n = same
W/P & C.C. ⇒ C = same

$V_1 T_1^n = C$ ---(ii)

$V_2 T_2^n = C$ ---(iii)

} for taylor's tool life eqn.

∴ From eqn (ii), (iii) & (iii)

$\{V_1 T_1^n = V_2 T_2^n\} \Rightarrow 100 \times (16)^n = 200 \times (4)^n$

[n = 0.5] Ans

from the put value of n is eqn (ii)

$\{V_1 T_1^n = C\}$

$100 \times (16)^{0.5} = C$

[C = 400] Ans.

Q. A 50 mm Diameter for steel rod was turned at 284 rpm and its failure accured in 10 min the speed was change to 232 rpm and tool failed in 60 min cutting speed and tool life, the value of taylor exponents is :-

Sol, given D = 50 mm

$N_1 = 284$ rpm $\quad N_2 = 232$ rpm

$T_1 = 10$ min $\quad T_2 = 60$ min

$\left\{ V = \frac{\pi D N}{60} \right\}$ mm/sec. $V_1 = \pi D_1 N_1 \Rightarrow \pi \times 50 \times 284$

$[V_1 = 44610.61 \text{ mm/min}]$ Ans

$V_2 = \pi D N_2 \Rightarrow \pi \times 50 \times 232$

$[V_2 = 36442.47 \text{ mm/min}]$ Ans.

$\{V_1 T_1^n = V_2 T_2^n\}$

$44610.61 \times (10)^n = 36442.47 \times (60)^n$

$[n = 0.11]$ Ans.

Q. In a machining operation doubling the cutting speed reducing its tool life to $1/8^{th}$ of the original value. find the value of taylor's exponents?

Sol, given $V_1 \longrightarrow 2 \times V_1$ $\{V_2 = 2V_1\}$

$T_1 \longrightarrow \frac{T_1}{8}$ $\{T_2 = \frac{T_1}{8}\}$

$\{V_1 T_1^n = V_2 T_2^n\}$

$\cancel{V_1} T_1^n = 2\cancel{V_1} \left(\frac{T_1}{8}\right)^n \Rightarrow \cancel{T_1^n} = 2 \times \frac{\cancel{(T_1)^n}}{(8)^n}$

$2 = (8)^n \Rightarrow \ln(2) = n \ln(8)$

$[n = 1/3]$ (or) $[0.3333]$ Ans.

Ans.

Q. In a single point turning operation of steel with a cemented carbide tool the value of taylor's tool life exponents is 0.25. If the cutting speed is half the tool life increase by:-

Sol, given $n = 0.25$

$V_1 \longrightarrow \frac{V_1}{2}$ $\{V_2 = \frac{V_1}{2}\}$

$V_1 T_1^n = V_2 T_2^n$

$\cancel{V_1} T_1^{0.25} = \frac{\cancel{V_1}}{2} T_2^{0.25} \Rightarrow 2 = \left(\frac{T_2}{T_1}\right)^{0.25}$

$\left\{ \begin{array}{l} x^{0.25} = x^{1/4} \\ x^{1/4} = 2 \\ x = (2)^4 \end{array} \right\}$

$\left(\frac{T_2}{T_1}\right)^{1/4} = 2 \Rightarrow \frac{T_2}{T_1} = (2)^4$

$\frac{T_2}{T_1} = 16 \Rightarrow \boxed{T_2 = 16\, T_1}$ Ans.

For above we can conclude that by decrease the tool velocity to its half the value of tool life becomes 16 times that of original tool life. Ans

(B) question. find out the percentage increase of the life?
Ans.

* Modified / Extended taylor's tool life eqn :-

$$\boxed{V \cdot T^n f^a d^b = C}$$

where, V = cutting velocity (m/min)
T = Time / Tool life (min)

n = exponents

f = feed ; d = Depth of cut

a & b = feed and depth of cut exponents respectively

$$\left[T = \frac{C^{1/n}}{V^{1/n} f^{1/n_1} d^{1/n_2}} \right]$$

$\{f^{a/n}\}$ $\{d^{b/n}\}$

$$\boxed{n_2 > n_1 > n}$$

most Imp. $$\boxed{\frac{1}{n} > \frac{1}{n_1} > \frac{1}{n_2}}$$

cutting speed has greater affect followed by feed and depth of cut respectively. $[d < f < v]$ most Imp.

* Machinability :- Machinability can be defined as ability of being machined (or) ease of machining.

- Such ease of machining of any toolwork pair is to be judge by :-
  - (i) Tool wear (or) tool life.
  - (ii) Magnitude of the cutting force.
  - (iii) Surface finish.
  - (iv) Magnitude of cutting temperature.

* Machinability index (or) Machinability rating :-

The Machinability index (K_m) defined as

$$\boxed{K_m = \frac{V_{60}}{V_{60R}}}$$

where, V_{60} = The cutting speed for the target material

that Ensures tool life of 60 minutes.
$V_{60}R$ = In the same for the reference material.

Q. (A-M. 2024)
Sol, given $V_3 = 2.5$ m/sec $\Rightarrow 2.5 \times 60 = 150$ m/min
$V_1 = 100$ m/min , $T_1 = 120$ min
$V_2 = 130$ m/min , $T_2 = 50$ min

$\{V_1 T_1^n = V_2 T_2^n\}$

$100 \times (120)^n = 130 \times (50)^n$

$[n = 0.2999]$ (or) $[n = 0.30]$ Ans

$\{V_1 T_1^n = V_3 T_3^n\}$

$100 \times (120)^{0.3} = 150 \times (T)^{0.3}$

$(T)^{0.3} = \frac{100 \times (120)^{0.3}}{150} \Rightarrow T = \sqrt[0.3]{\frac{100 \times (120)^{0.3}}{150}}$

$[T = 31.06 \text{ min}]$ Ans

Than the value of C is not given

$\{V_1 T_1^n = C\} \Rightarrow 100 \times (120)^{0.3} = C$

$[C = 420.48]$ Ans

Q. (A-M 2022)
Sol, given HSS tool :- $VT^{1/7} = C_1$
tungsten carbide tool :- $VT^{1/5} = C_2$

$v = 24$ m/min
$T = 128$ min

$V_2 = 30$ m/min
$T_2 = ?$

CASE I :- HSS tool

$\{V_1 T_1^n = V_2 T_2^n\}$

$24 \times (128)^{1/7} = 30 \times (T_2)^{1/7}$

$T_2 = \sqrt[1/7]{\frac{24 \times (128)^{1/7}}{30}}$ $[T_2 = 26.84 \text{ min}]$ Ans

CASE II :- tungsten carbide

$\{V_1 T_1^n = V_2 T_2^n\}$

$24 \times (128)^{1/5} = 30 \times (T_2)^{1/5}$

$T_2 = \sqrt[1/5]{\frac{24 \times (128)^{1/5}}{30}}$ $[T_2 = 41.98 \text{ min}]$ Ans

Tungsten carbide tool life is better than High speed steel tool life.

$\{T = T_{TC} - T_{HSS}\} \Rightarrow 41.98 - 26.84$

$[T = 15.14 \text{ min}]$ Ans

06/10/25

* Tool wear mechanism :- There are 3 types :-
1) Chipping off of tool 2) Crater wear / Rake wear
3) Flank wear

* NOTE :- Since Crater wear is not coming in contact with workpiece.

(A) hence it will not affect it therefore it is not in our consideration.

(B) Flank wear :- Reason :- 1) Abrasion by hard particles & inclusions the workpiece eg :- Graphite

Present in casting.

2) since at low cutting velocity, BUE formation is prominent & hence when it broken down than it leads to shearing off the micrawelds between tool & work material.

(3) Ploughing of BUE :- when BUE chips off from the end than there is possibility that it will pass via clearance surface & as a result of it not only disturb the machined surface but the clearance surface of the tool.

4) Material removal rate ↑ → ∵ ↑ in (t × b) & ↑ in (fd) leads of formation of BUE as generation of heat is increased & hence flank wear increased.

ortho → $tb(v\downarrow)$ ↑

Turning → $fd(v\downarrow)$ ↑

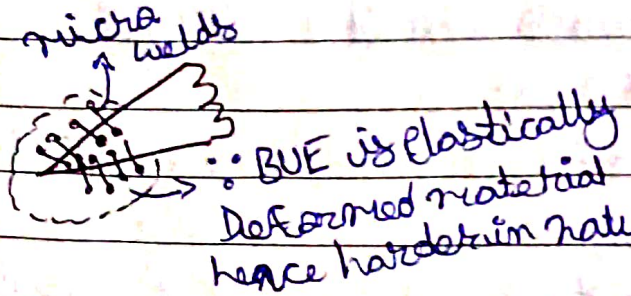

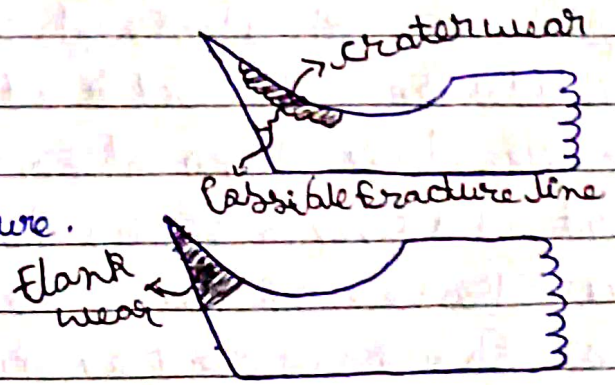

09/10/25

* Cutting Tool Material :- As we have seen that the cutting tool is subjected to static & dynamic force, high temperature, wear & abrasion.

→ So to get reasonable tool life, the tool material should

meet the following requirement :-

(i) Hot Hardness :- Tool doesnot lose it hardness & strength at the high temperature developed during machining, so that material must be at least 35% to 50% harder than the work material.

(ii) Wear & abrasion resistance :- It should be sufficiently harder (resistance to wear, abrasion & indentation) so that the tool retains its shape & size with cutting efficiency for a reasonable long time.

(iii) Toughness :- It should be sufficient tough (resistant to shock loads) so that the fine cutting edges of the tool does not break when it is suddenly loaded.

(iv) It should be capable of with standing the sudden cooling effect of coolent used during cutting i.e low chemical & mechanical affinity for the work material.

(v) It must have high thermal conductivity - (Measure of its ability to conduct heat).

(vi) must have low thermal co-efficient of expansion/ Co-efficient of thermal expansion.

(vii) It must have specific heat.

(viii) It should be easy to form, grind & sharpen to desired geometry.

:- Selection of Proper tool material :-

Depend upon no. of factors such as :-

a) Type of cutting operation.

(b) Material of workpiece.
(c) surface finish required.
(d) Quantity of component to be produced etc.

:- cutting tool Material :-

(i) Plain carbon tool steel :- The material is in-expensive / cheap & can be easily turned / ground / machined.

-> The property of the material depend upon the percentage of carbon content.

-> low carbon steels are tough & shock resistance.

-> High carbon steel are abrasion resistant.

But their hardness decreased rapidly above 200°C, so they are useful for low speed operation like drilling, reaming, broaching etc.

:- Application :- Use to manufacture - wood working tools, cold chisels, hammers, knives etc.

(ii) Alloy tool steel :- Plain carbon steel when added with various alloying element than it is referred as alloy tool steel.

-> This alloying element slow down the transformation rates. Due to this material become less susceptible to cracks while quenching.

-> This steel have greater wear resistance & hot hardness than the plain carbon steel.

:- Application :- These are widely used for drills, taps,

diameters etc.

* NOTE :- can be operational upto cutting temperature of about 300°c.

:- Some important alloying element are as follows :

(a) Carbon :- It combine to form carbide with iron which tends to increase the hardness, strength & wear resistance (% C - 0.6 to 1.4%)

(b) Manganese :- (MN) It is added to steel as a deoxidising & desulphurising agent.

(c) Chromium (Cr) :- Ferrite phase stabiliser :- Addition of Cr results in formation of carbides of chromium which are very hard, yet resisting steel is more ductile than a steel of same hardness produced by a simple increase in carbon content.
→ It also increased toughness & hardness.

(d) Vanadium :- It increase hot hardness & abrasion resistance as it has very high tendency to form carbide therefore used only in small amount.

(e) Tungsten :- It is widely used in tool steel because it maintain its hardness even at red heat. It adds both toughness & hardness.

(iii) High speed steel (HSS) :- This tool material is basically high carbon steel, to which the various alloying element [Tungsten (W), chromium (Cr), vanadium (V)] is added in larger amount as compared to alloy

tool steel, to improve hardness, toughness & wear resistance properties.
-> their hardness upto 600°c.
-> Among all - 18 : 4 : 1 HSS contain 18% tungsten/4% chromium & 1% vanadium having cutting velocity ≈ 300 m/min & temp° ≈ 600°c.
:- Application :- Turning tool steel, Broaches to cut ferrous material, milling cutters, gear hobbing, shaping & shaving tools.

iv) Diamond :- It is hardest of all cutting tool material. It has following properties makes it ideal choice for being a tool material.
a) Extreme hardness.
b) low thermal Expansion.
c) high thermal (heat) conductivity.
d) very low co-efficient of friction.
This is used when good surface finish & dimensional accuracy are desired. But it can't be used with ferrous material because of diffusion of carbon atom from diamond to the workpiece.
:- Application :- single point turning tool & boring tool, milling cutter, reamers, grinding wheel honning tool.
cutting speed - 200 to 500 m/min; temperature with ≈ 2000°c with highest tool life.

* **NOTE :- Compacts :-** This material is made up of diamond powder by sintering into moulded shapes by high pressure & temperature technology. It has incred strength & shock resistance than that of single crystal diamond.

(V) Cubic Boron Nitride (CBN) :- Next to Diamond CBN is the hardest material currently available. -> CBN has high hardness & high thermal conductivity & Much higher poly crystalline forms as compared to Diamond. -> It is chemically inert, is used as a substitude for diamond for machining steel.

-> other Application :- grinding wheel, for machining higher temp^r alloy like titanium, Nimonic, stainless steel, chilled cast iron.

-> The life of CBN tool is 4 to 5 times higher than that of diamond tool.

* **Cutting Fluids :-** In many metal cutting operation lots of heat is generated due to plastic deformation of metal, friction at the rake face of the tool (between the tool & the chip) & also the friction between the workpiece & the flank of the tool.

-> This increase the temp^r both of the workpiece & the tool point, resulting in decrease in hardness & hence life of the tool.

→ So, the use of cutting fluid in machining operation is very essential.

:- Application of cutting fluid produce following effect

(i) Reduce force & energy consumption.
(ii) Provide lubrication action.
(iii) Protect nearly machined surface from environmental corrosion.
(iv) facilitates chip breaking in certain material.
(v) friction at the workpiece tool interface is reduced.
(vi) Heat is reduced due to cooling action at the interface

-: Source of heat in Metal cutting:-
(i) Thermal Aspects in Maching (or) chip formation.
(ii) condition for formation with continuous chip with Bulid up edge (BUE).

-: Requirement of cutting fluid / Properties of cutting fluid / characteristics:-
(i) It should wet surface of cutting tool & workpiece for better cooling & lubricating effect.
(ii) Good lubricating property.
(iii) High heat absorbing capacity.
(iv) It should be odorless.
(v) It should not emit toxic vapours.
(vi) It should not strain or leave residues on the workpiece surface.

A cutting fluid mainly serve following function cooling — lubrication — Anti welding.

(vii) It should not damage or react with the materials of machine tool parts.

(viii) It should have high heat conductivity & high film co-efficient & high specific heat.

(ix) It should have low viscosity to permit free flow of the liquid.

★ NOTE :- At cutting speed of more than 60 m/min the lubricating effect of chemically active cutting fluid is only marginal & for such high speed cutting operation the cooling action of the cutting fluid is more predominant than its lubricating action.

:: Types of cutting fluids :- All the cutting fluids can be divided into two groups :-

(A) (i) water based fluids.

(B) (ii) straight or neat oil based fluids.

→ Many additives are used in conjunction with each of these fluids to accomplish a variety of specific objectives.

(A) Water Based cutting fluid :- Early attempts to improve cooling & lubricating properties of water included the addition of soft soap but there are now oils which have the desired effect & form emulsion with water. These oils are known as soluble oils.

→ The most popular being soluble oil (1-5%) is mixed

with water to form an emission. this has excellent cooling properties at lowcost & there is also some lubricating effect between tool & chip which reduces tool wear
-> No doubt water can also be used as a coolant but it causes rust & corrosion.

(B) straight or neat oil based cutting fluid :- The term straight when applied to lubricant & coolants mean undiluted. However most of the oils are not used straight but are mixture of oils or oil with chemical such as sulphur & chlorine added to them.
-: straight or neat oil are classified into following subgroup

(i) Mineral oils :- These are primarily composed of hydrocarbons of different structure & molecular weights.
-> These oils are normally used for light machining operations such as turret & capstan lathes where free cutting brasses & steel are being machined.

(ii) sulphurised oils :- when sulphur is mixed with lard oils, it is called sulphurised oil.
-> It is used for heavy duty lathe work, gear cutting & thread grinding.

(iii) chlorinated oils :- when chlorine is added in mineral oils it is called chlorinated cutting oils. In broaching

operation also these oil are quite commonly used.

(iv) Straight fatty oil :- The most important variety of straight fatty oil is lard oil.
-> This oil are not stable & rapidly lose their lubricat properties. Even also they are more viscous which limits its use. -> lard oil is mainly used during thread cutting with dies.

(V) Compounded or blended oil :- These are mixtures of mineral & fatty oil. -> with dillution also, they also able to retain their film strength as a res they are much cheaper & more fluid than neat fatty
-> They are suitable for heavier duty operation such as threading on capstan & turret lathe, thread milling.

:- Application of cutting fluids :- The cutting fluid may be applied to the cutting tool in the following way
(a) By hand using a brush.
(b) By means of a drip tank attached to the m/c body.
(c) By means of a pump, known as flood application / High Jet method.
-> For the effective use of cutting fluid & for heavy & continuous chip cutting. For the (c) method i.e by means of pump is prominently used.
-> In this method, a continuous stream of cutting flu

is directed at the cutting zone with the help of nozzle or Jet. This is also known as "Hi-Jet Method".

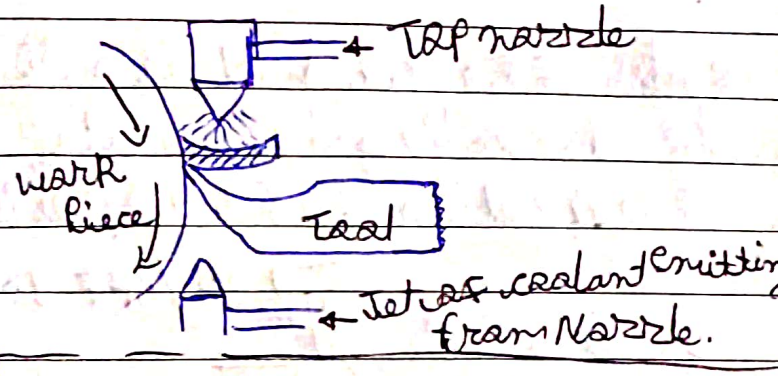

-> The used cutting fluid drops into a tank at the bottom, before it is recirculated by the pump, it passes through many filters to remove chip ~~to~~ & dirts.

(d) By Mist method of coolant application :-

-> The size of fluid drop is of the order of 10 - 25 ~~μ~~ meter & it is spread on to the cutting zone with velocity of about 300 meter/sec & under high pressure.

-> Following are the beneficial effects of mist cooling

(i) Due to high velocity of fluid application, the dissipation of heat is increased & it leads to maintain the desirable high temp^r gradient near the tool surface.

(ii) surface area of the coolant in the form of mist is much greater than in the flood application & hence increase in cooling capacity of the coolant.

(iii) Due to expansion of mist in the issuing nozzle, its temp^r falls down considerably.

Due to above reason mist cooling can be applied to almost all cutting operations, but it is generally more useful with high hardness work material. But according to research it has been proved that is

mobile kaend

only effective within a limited temp^{r} range where flood cooling loses its effectiveness due to the formation of a vapour layer under it.

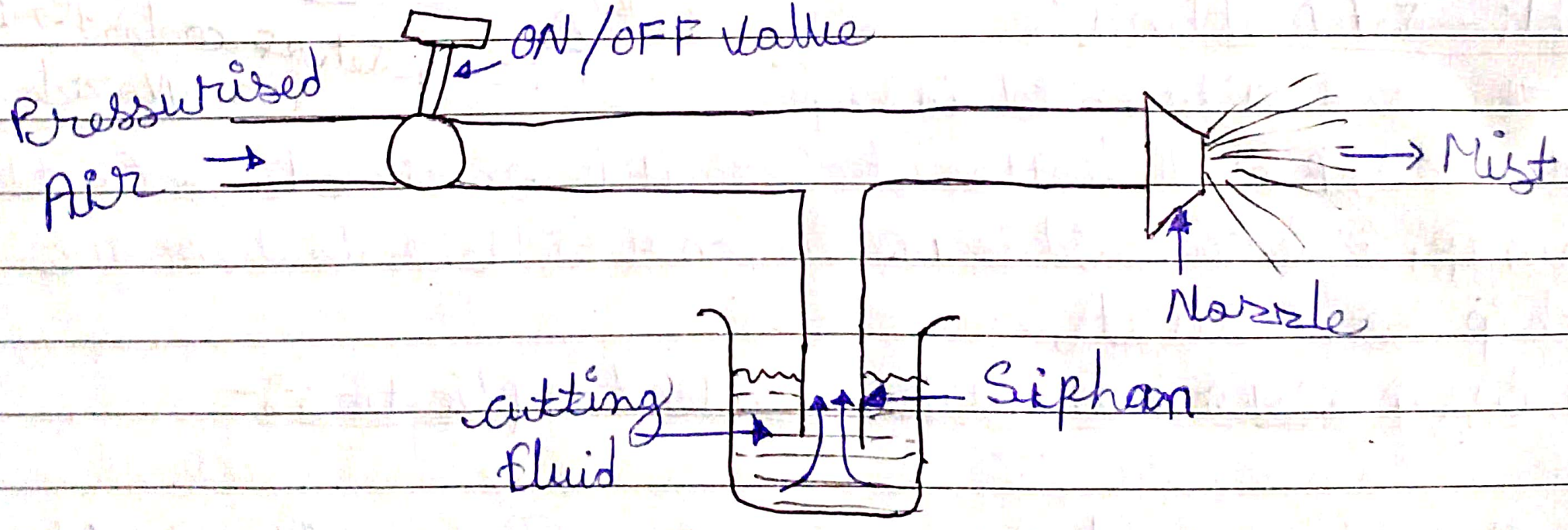

* Grinding :-

most imp :- ISO Designation :- (or) Elements of grinding wheels :-

(X) (C) (23) (M) (8) (V) (X)

X :- Manufacture symbol

C :- Types of Abrasive ⇒ A = Al_2O_3
C = carbide
D = Diamond

23 :- Grain size/grade
⇒ 10 - 24 = Rough
30 - 60 = Medium
70 - 180 = finish
220 - 600 = Superfinish

Types of

M :- Hardness ⇒ A - H = Soft
I - P = Medium
Q - Z = Hardness

8 :- Structure ⇒ 0 - 7 = Dense / closed.
8 - 16 = open.

V :- Types of bond ⇒ V = Vitrified (clay)
S = Silicate
M = Metal
R = Rubber
B = ~~Rotisom~~ Resinoid

6.24 SLOTTER

A slotter is mainly used for internal machining of blind holes or vertical machining of complicated shapes which are difficult to be produced on horizontal shaper. Jobs such as keyway cutting, machining of square holes, cutting of internal or external teeth on bigger gears and machining of dies, straight or curved slots are taken up on this machine. The salient features of the slotter are shown in Fig. 6.161. As regards its working principle, it is similar to shaper with the difference that the ram of the slotter reciprocates in vertical position and cuts in its downward strokes only. The job is supported on a swivel table which has a rotary feature in addition to the usual table movements in cross directions. Indexed machining of jobs like gears or splines is easily performed on this machine. Slotter ram may be crank driven or hydraulically driven. Stroke length of the slotter may be up to 900 mm.

Slotter tools are of rigid shank and are different from those of the single-point tools. Slotter tools cut parallel to their shank and so their shape is modified accordingly. They have no side rake.

6.24.1 Main Parts of a Slotter

Main parts of a slotting machine are shown in Fig. 6.161. These are described in the following:

1. **Base** or **bed** is a heavy cast iron construction and supports other parts of the slotting machine such as column, ram and its driving mechanism, table, etc. The top of the base is accurately finished to provide guide ways for mounting of the saddle. The cross slide guide ways are perpendicular to the column face.

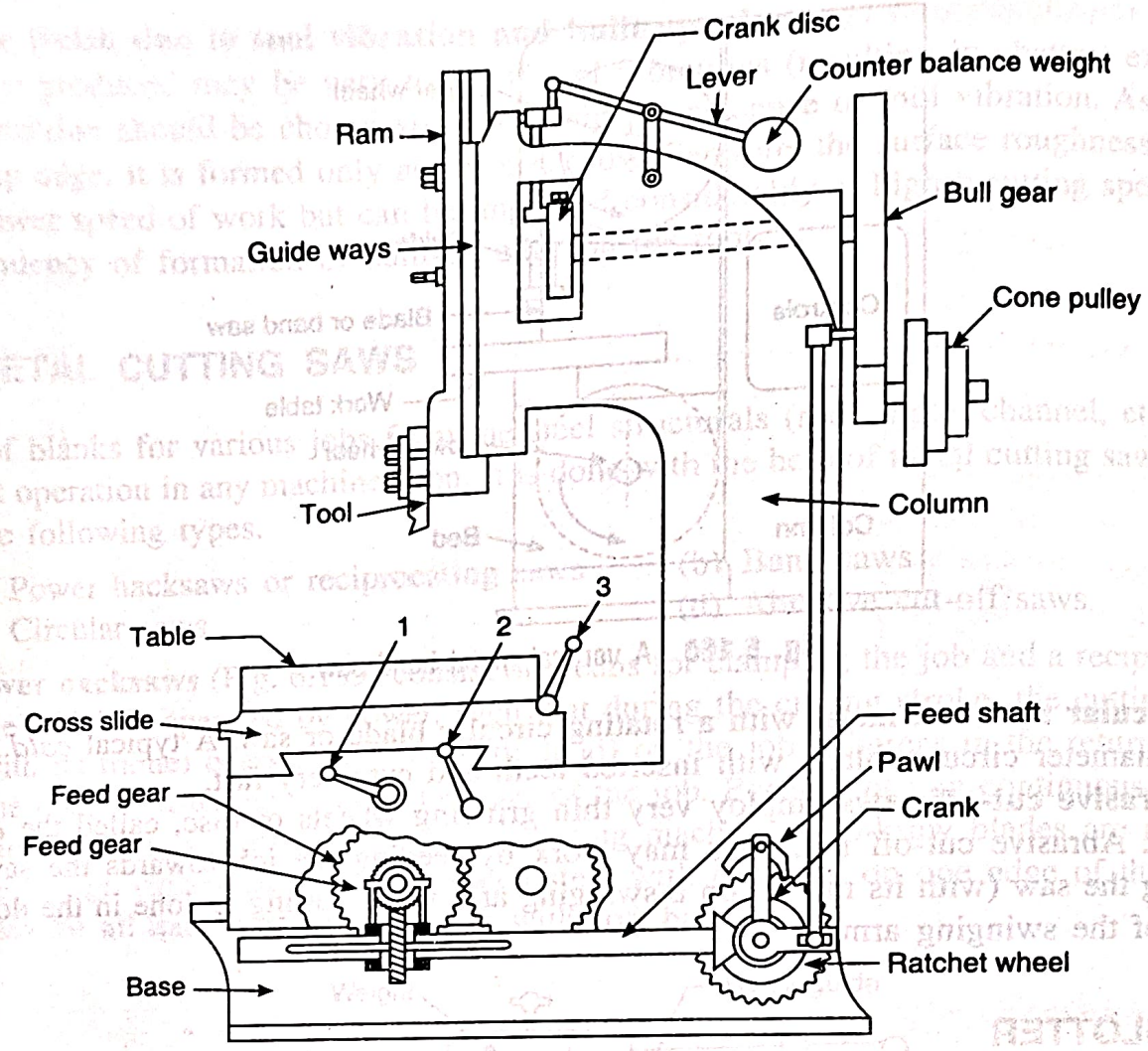

Fig. 6.161 Main features of a slotting machine: 1. Cross feed handle, 2. Longitudinal feed handle, 3. Table circular feed handle.

2. **Column** is the vertical structure cast integral with the base. It houses the mechanism for driving ram and feeding mechanism. The front vertical face of the column carries guide ways for ram to reciprocate upon.
3. **Saddle** mounted upon guide ways (not shown in Fig. 6.161) can be moved towards or away from the column. The saddle carries guide ways for cross slide. It has manual or power feed.
4. **Cross slide** is mounted upon guide ways made at the top of the saddle and can be moved parallel to the front face of the column. It has manual or power feed.
5. **Table** is a circular rotary table mounted on the top of the cross slide. A circular feed handle for the table is provided. Rotation of table is effected by hand or by power. The table carries T-slots to help mounting of jobs on the table.
6. **Ram and tool head:** They reciprocate up and down on the guide ways made on the front face of the column. The ram carries a tool head at its bottom end. In some machines, special tool head is provided to relieve the tool during its return stroke. A slotter removes metal during its downward cutting stroke only and no metal is cut during its return or upward stroke. A quick return mechanism given with the machine enables the return or idle stroke to be completed faster than the cutting stroke.

6.24.2 Quick Return Mechanism for Ram

The common types of driving mechanisms for the ram are as follows:

(a) Whitworth quick return mechanism
(b) Slotted disc mechanism
(c) Slotted link and gear mechanism
(d) Hydraulic mechanism
(e) Variable speed reversible motor drive mechanism

1. Whitworth quick return mechanism is widely used on medium-sized slotters. The mechanism is shown in Fig. 6.162 wherein A and B are fixed centres of bull gear (7) and driving plate (8), respectively. The crank pin and slide block (4) rotate in a circular path at a constant speed, rotating in turn the plate (8) about B. The system has the arrangement such that when plate (8) rotates about fixed point (B), the pin (3) also rotates in a circular path about the point (B) resulting into upward or downward movement of ram (1).

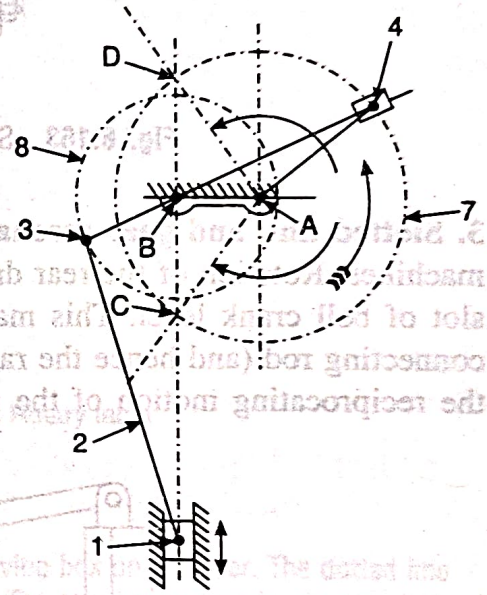

Fig. 6.162 Line diagram of Whitworth quick return mechanism.

Stroke length of the ram is equal to twice the distance between pin (3) and centre B, which can be varied. When the block (4) is at position C, the ram (1) will be at the maximum upward position of the stroke and when the block (4) is at position D, the ram (1) will be at its maximum downward position of the stroke. When the bull gear (7) rotates in anticlockwise direction, the block (4) rotates through an angle CAD and thus the downward cutting stroke is performed. And when the block (4) rotates further anticlockwise beyond point D and through an angle DAC, the return stroke is completed. Since the block (4) rotates at a constant speed, its turning through angle CAD will take more time than turning through the angle DAC. Hence, quick return motion of ram is obtained. Cutting time and return time are related by the expression, angle CAD divided by angle DAC.

Stroke length of the ram can be varied by altering the position of pin (3) with respect to the centre B. Position of stroke of the ram may be adjusted by releasing the stroke adjustment lever (Fig. 6.163) and then by altering the position of connecting rod clamping bolt within the slot provided in the body of the ram. The weight of the ram is counterbalanced by a weight attached to the back of the ram.

2. Slotted disc mechanism is shown in Fig. 6.163. A T-slot is cut in the disc through which crank pin can be set at different positions to vary the stroke length.

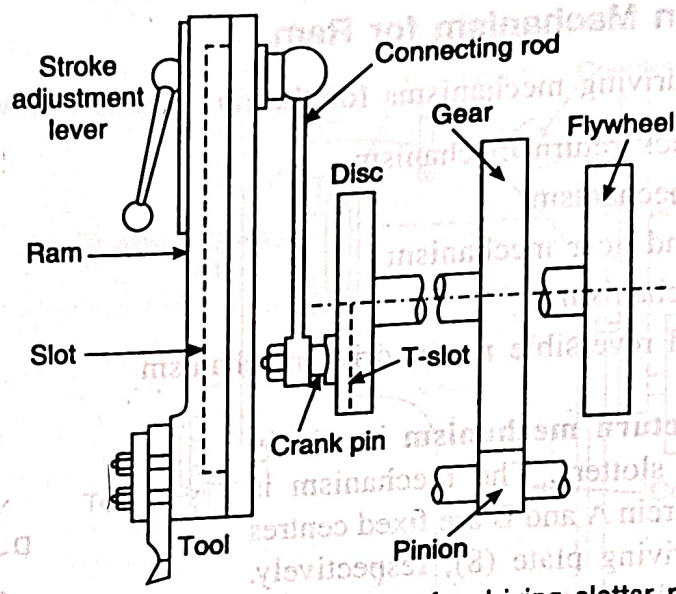

Fig. 6.163 Slotted disc mechanism for driving slotter ram.

3. Slotted link and gear mechanism is shown in Fig. 6.164. It is used for heavier slotting machines. Rotation of the rear driving wheel results in the sliding of die up and down in the slot of bell crank lever. This makes the lever swing about its fulcrum. With the result, the connecting rod (and hence the ram) is alternatively pushed up and pulled down. This enables the reciprocating motion of the ram.

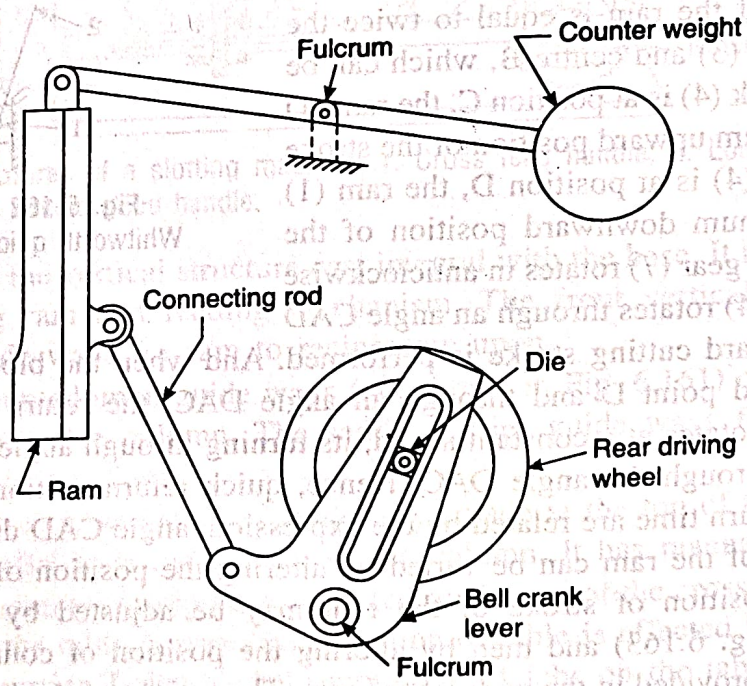

Fig. 6.164 Slotted link drive.

4. Hydraulic mechanism used on slotters is similar to the one described with shaper.

5. Variable speed reversible motor drive mechanism is used on large slotters. It has already been described with planer.

6.24.3 Operations on a Slotter

The operations performed on a slotter are given below:

(i) Production of flat surfaces
(ii) Machining cylindrical surfaces
(iii) Machining irregular surfaces such as cam
(iv) Cutting of slots, keyways, grooves, internal gear teeth, etc.

Some of the slotter operations are illustrated in Fig. 6.165 to Fig. 6.168.

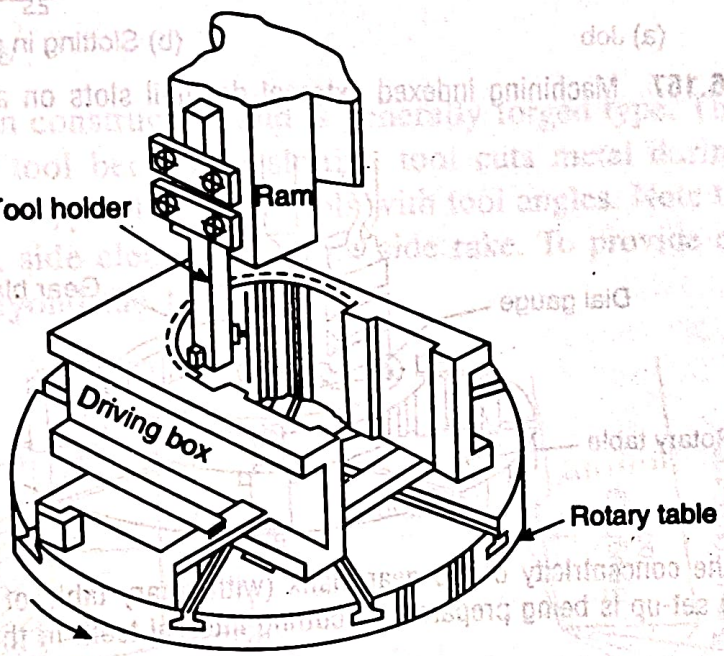

Fig. 6.165 Forming the semi-circular portion of a locomotive driving box on a slotter. The dotted line shows the size to which the job is to be machined. The circular portion is generated by applying power feed to the rotary table of the slotter.

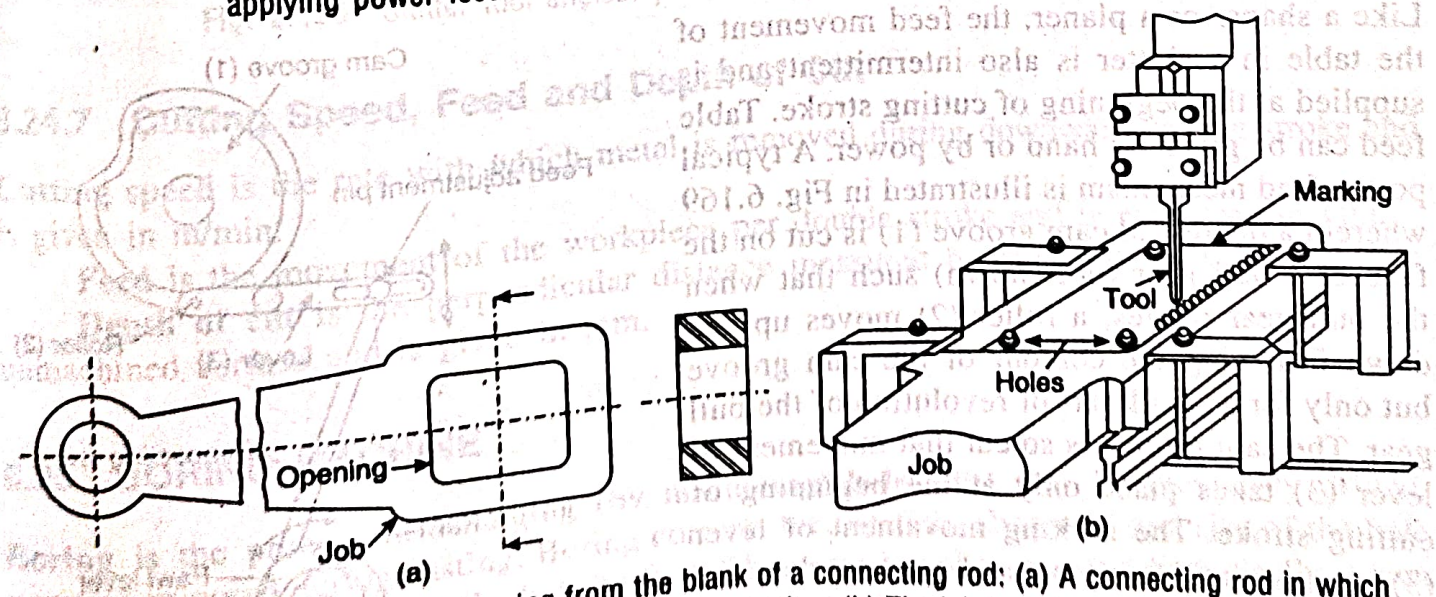

Fig. 6.166 Cutting out an opening from the blank of a connecting rod: (a) A connecting rod in which a square opening is to be cut out by slotting, (b) The job has been set on the slotter table with proper layout of the opening (marking of the opening to be cut). Note the four holes drilled at four corners of the opening to help starting the cut.

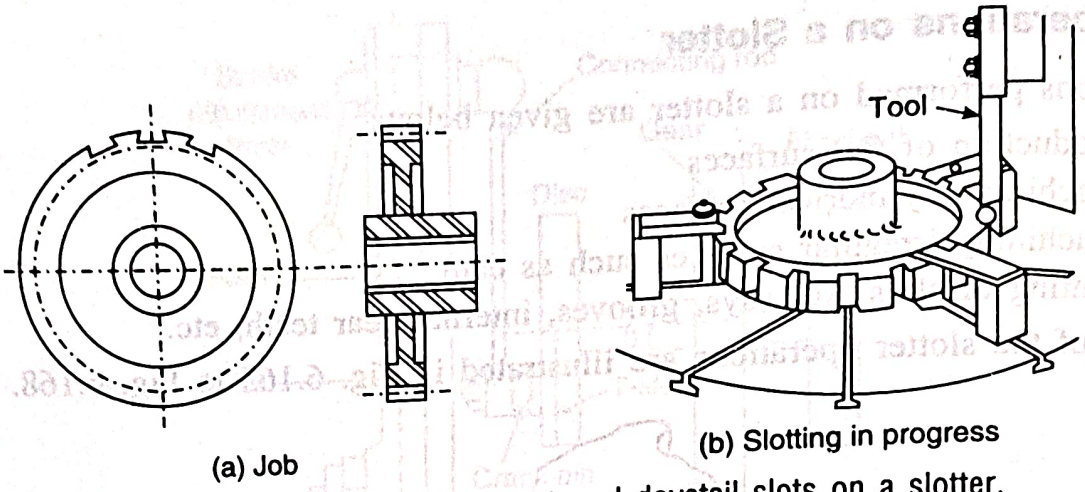

Fig. 6.167 Machining indexed external dovetail slots on a slotter.

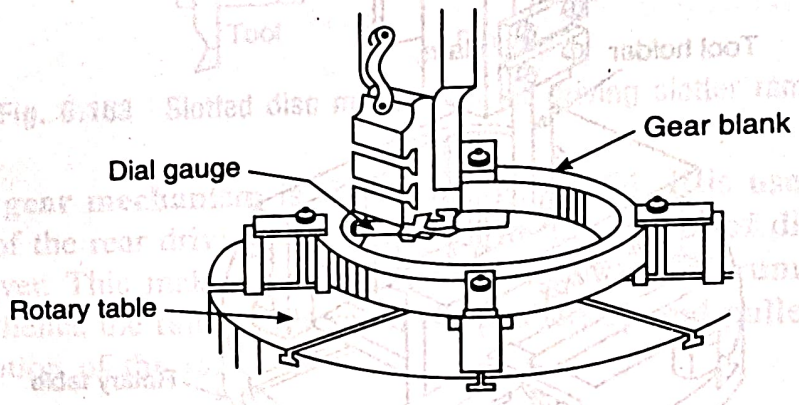

Fig. 6.168 Checking the concentricity of the gear blank (with rotary table of the slotter) using a dial gauge. The set-up is being prepared for cutting internal teeth in the gear blank with a form cutter.

6.24.4 Feed Mechanism

Like a shaper or a planer, the feed movement of the table in a slotter is also intermittent and is supplied at the beginning of cutting stroke. Table feed can be given by hand or by power. A typical power feed mechanism is illustrated in Fig. 6.169 wherein a depressed cam groove (1) is cut on the face of a bull gear (not shown) such that when the bull gear rotates, a roller (2) moves up and down following the contour of the cam groove but only for a small part of revolution of the bull gear. The cam groove is so cut that movement of lever (3) takes place only at the beginning of cutting stroke. The rocking movement of lever (3) is transmitted to ratchet and pawl mechanism. The ratchet wheel is mounted on the feed shaft (4) of the table.

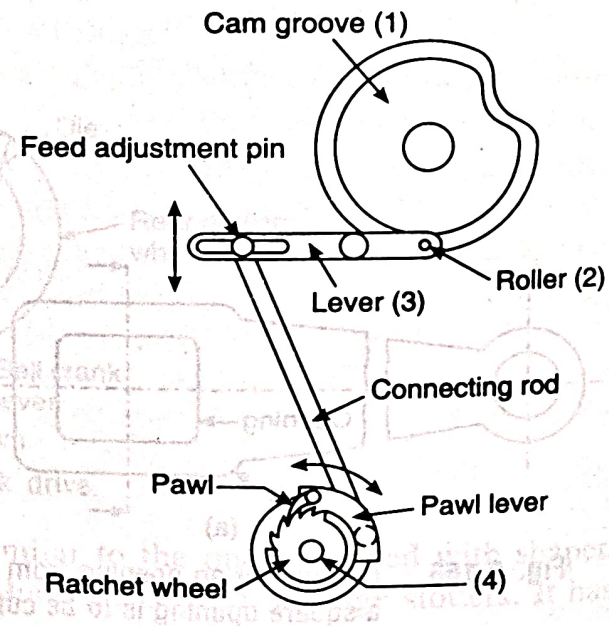

Fig. 6.169 Power feed mechanism of a slotter.

6.24.5 Types of Slotters

(a) **Puncher slotter** is used for removing heavy stock of metal and is of rigid and heavy construction. It is used for machining forgings, stamped parts and other rough-shaped castings.

(b) **General production slotter** is used for general machining works.

(c) **Precision tool room slotter** is primarily used for tool rooms for precision slotting works.

(d) **Key seater** is exclusively used for cutting keyways in wheels and gears.

6.24.6 Slotting Tools

A slotting tool is robust in construction and is generally forged type. The slotting tool differs from a shaper or planer tool because a slotting tool cuts metal during its vertical cutting stroke. Figure 6.170 shows typical slotting tools with tool angles. Note that a slotting tool has top rake, front clearance, side clearance and no side rake. To provide clearance, the nose of the tool projects little beyond the tool shank.

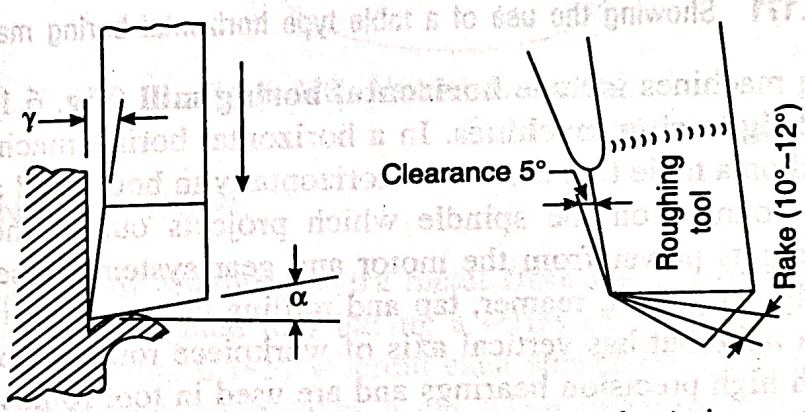

Fig. 6.170 Slotter tool angles. γ–top rake angle, α–front clearance angle.

6.24.7 Cutting Speed, Feed and Depth of Cut

Cutting speed is the rate with which metal is removed during downward cutting stroke and is given in m/min.

Feed is the movement of the workpiece per double stroke and is expressed in mm.

Depth of cut is the perpendicular distance measured between machined surface and unmachined surface and is given in mm.

6.25 BORING MACHINE

Boring is the process of enlarging (by machining) holes that may be previously drilled, punched or cored during casting. Boring corrects the location, alignment and size of the hole and imparts a good finish to the hole surface. The operation of boring is schematically shown in Fig. 6.171. With proper tooling and adjustment of job supporting devices, a boring machine can perform operations such as drilling, boring, reaming, facing, turning, milling, and forming. Boring of large cylinders of engines, pumps and compressors is the most common operation

done on a boring machine. The boring tool is held in a boring bar (Fig. 6.171). When the cutting tool is a milling cutter type, it is mounted directly on the machine spindle.

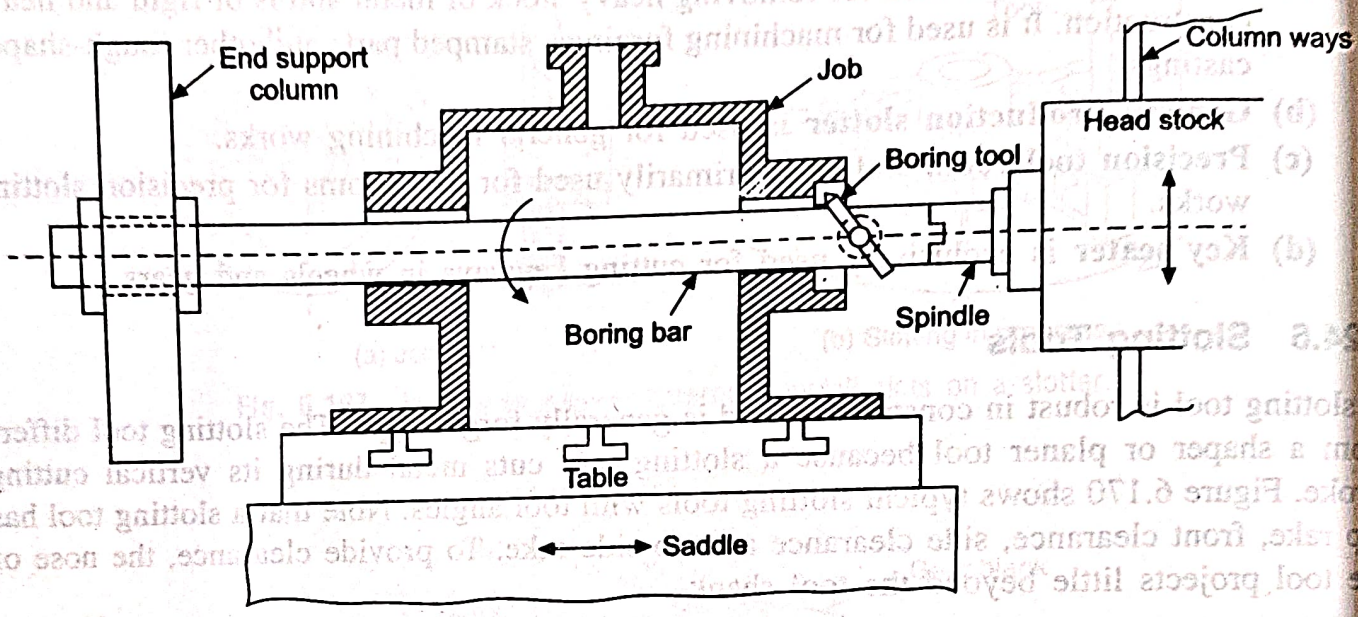

Fig. 6.171 Showing the use of a table type horizontal boring machine.

Types of boring machines include **horizontal boring mill** (Fig. 6.172), **vertical boring mill** (Fig. 6.173) and **jig boring machines**. In a horizontal boring machine (Fig. 6.172), the workpiece is mounted on a table that can move horizontally in both axial and radial directions. The cutting tool is mounted on the spindle which projects out of the head stock of the machine. The spindle gets power from the motor and gear system housed in the head stock. The spindle can easily carry drill, reamer, tap and milling cutter. A vertical boring mill (Fig. 6.173) is similar to a lathe but has vertical axis of workpiece rotation. Jig borers are vertical boring machines with high precision bearings and are used in tool rooms for making jigs and fixtures and for other precision works.

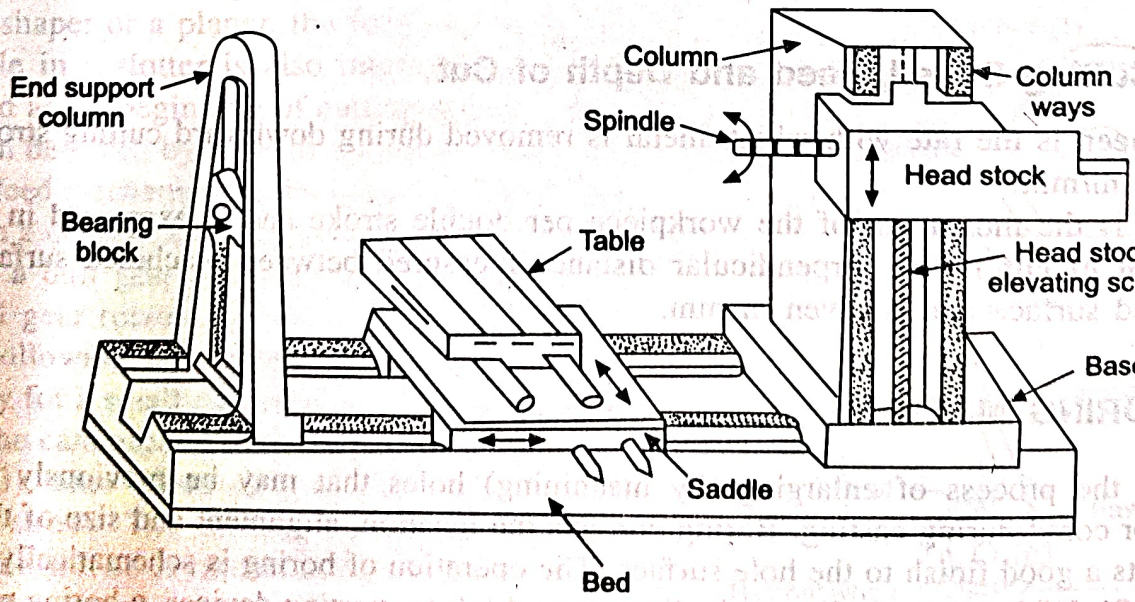

Fig. 6.172 Horizontal boring mill. Note the movement of various components of the machine. The head stock contains spindle, spindle drive and feed gearing, and other mechanisms including boring, drilling and milling head. Boring mill may have more than one spindle.

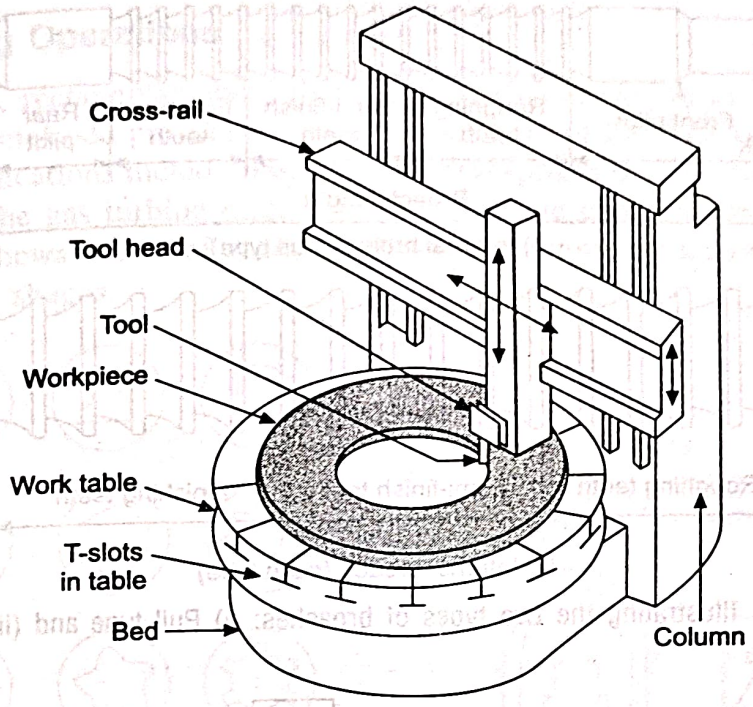

Fig. 6.173 Vertical boring mill.

6.26 BROACHING MACHINE

Broaching is the method of removing extra metal from the external or internal surfaces of a workpiece by using an elongated tool having a series of multiple cutting teeth positioned in tandom (Fig. 6.174 and Fig. 6.175) wherein each successive tooth is slightly higher than its predecessor such that each tooth takes a cut when the broach is reciprocated past the workpiece. Sometimes machining on a workpiece may be completed in a single stroke of the broaching machine because of the typical features of the broaching tools. The amount of metal removed is a function of tooth depth and number of teeth in the broach. The block diagram of a vertical broaching machine is shown in Fig. 6.176.

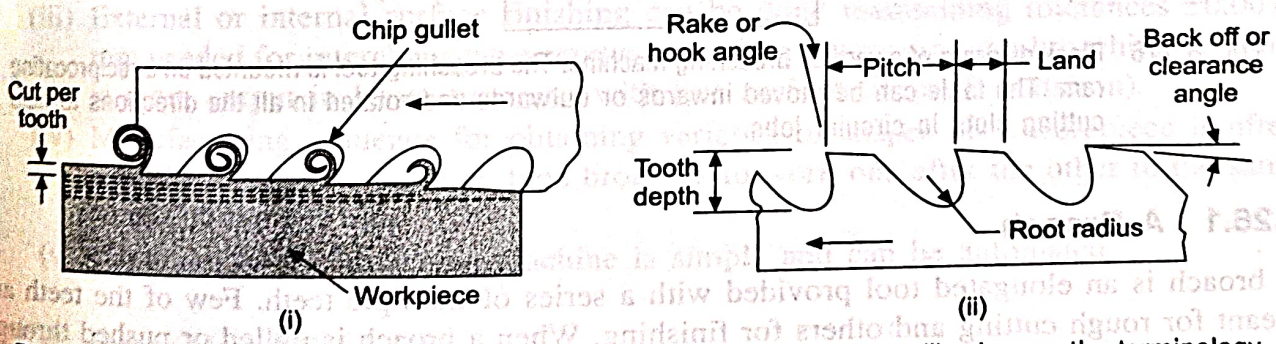

Fig. 6.174 The cutting action of a broach and its features are shown at (i) whereas the terminology of a broach is given at (ii).

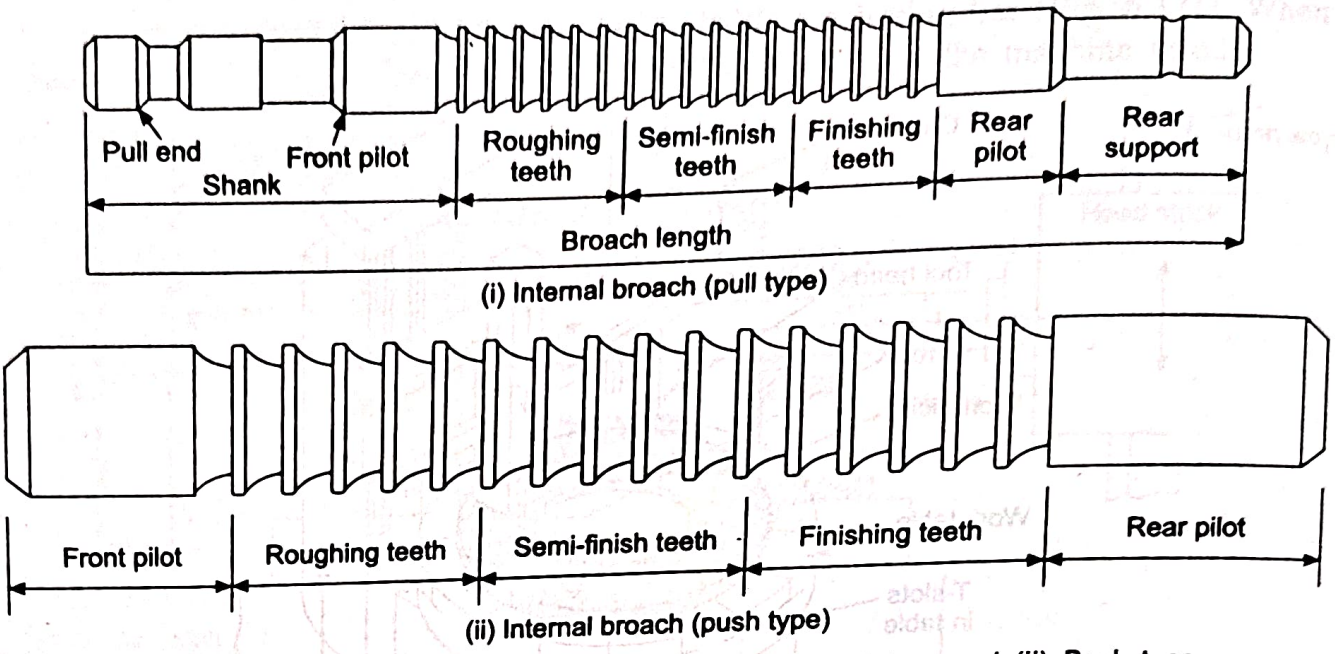

Fig. 6.175 Illustrating the two types of broaches: (i) Pull type and (ii) Push type.

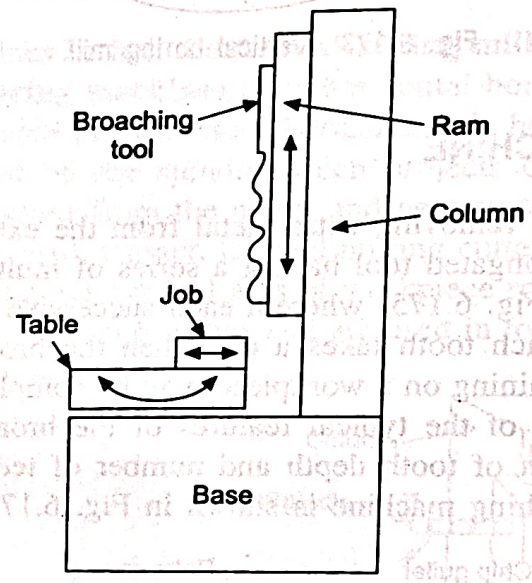

Fig. 6.176 Block diagram of a vertical broaching machine. The broaching tool is mounted on a reciprocating ram. The table can be moved inwards or outwards and rotated in all the directions to help cutting slots in circular jobs.

6.26.1 A Broach

A broach is an elongated tool provided with a series of multiple teeth. Few of the teeth are meant for rough cutting and others for finishing. When a broach is pulled or pushed through a workpiece, each tooth takes its own cut. Roughing and finishing operations are thus completed in a single stroke of the broach. The pull and push type broaches are shown in Fig. 6.175, whereas the cutting action of a broach is shown in Fig. 6.174. A broach may be made from high carbon steel or high speed steel.

6.26.2 Broaching Operations

Machining of square, rectangular and polygon holes, splines, keyways, serrations in a hole, internal gear and special odd profiles in the hole are some of the well-known applications of broaching. Other applications include finishing of spiral splines in gun barrels, involute splines, shaping of slots on the gas turbine rotor, washing machine components and other numerous jobs. Figure 6.177 shows a few of many applications commonly encountered in broaching internal and external shapes.

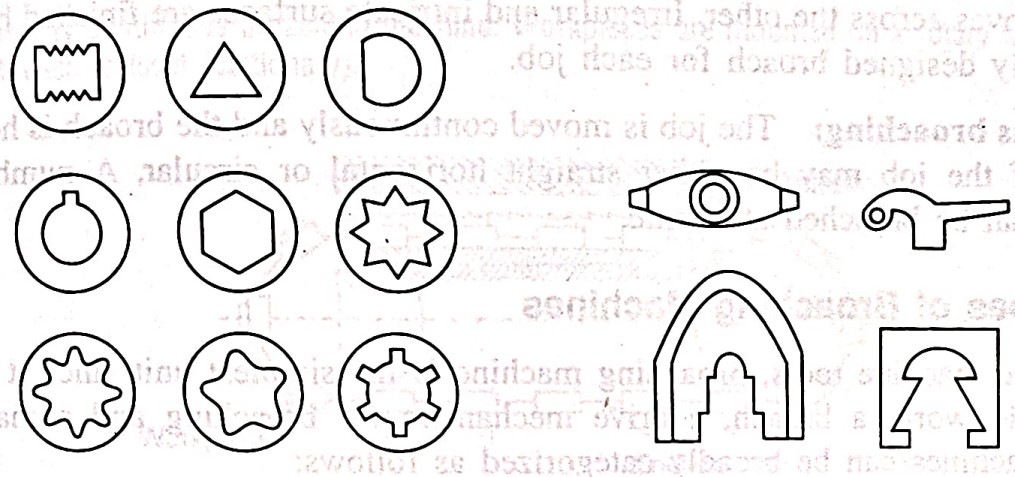

Internal broaching External broaching

Fig. 6.177 Few examples of surfaces generated on a broaching machine.

6.26.3 Advantages of Broaching

Broaching is sometimes considered advantageous for mass production because of the following reasons.

(i) Roughing and finishing operations in machining a job are often completed in single stroke of the broach, giving high rate of production.

(ii) Any form that can be achieved on a broaching tool can be reproduced effectively on the workpiece.

(iii) External or internal surface finishing can be done maintaining tolerances ±0.0075 mm needed for interchangeable production. The primary aim of a broaching machine is more output in lesser time and with fine surface finish (0.8 micron).

(iv) Manufacturing sequence for obtaining varieties of shapes on a workpiece is often simplified by using multiple type broaches to work one after the other in the same stroke of the machine.

(v) Operation of the broaching machine is simple and can be automated.

6.26.4 Broaching Methods

According to the method of operation, broaching methods may be classified as follows:

(i) Pull broaching (ii) Push broaching

(iii) Surface broaching (iv) Continuous broaching

1. Pull broaching: The job is held stationary and the broach is pulled through the work while being held in a special head. This method is generally used for internal broaching. Longer broaches are used in pull broaching.

2. Push broaching: The job is held stationary and the broach is pushed through the job. Hand press or hydraulic press is used for push broaching. The method is popular for cutting keyways and for sizing holes. Shorter broaches are used in push broaching.

3. Surface broaching: This method is used mostly for surface finishing. Either the job or the broach moves across the other. Irregular and intricate surfaces are finished by this method using specially designed broach for each job.

4. Continuous broaching: The job is moved continuously and the broach is held stationary. Movement of the job may be either straight horizontal or circular. A number of similar workpieces can be broached at a time.

6.26.5 Types of Broaching Machines

Among all the machine tools, broaching machine is the simplest unit since it consists of a fixture to hold work, a broach, a drive mechanism for broaching and a machine frame. Broaching machines can be broadly categorized as follows:

1. **Horizontal broaching machines** are generally pull type (Fig. 6.178). These are used for cutting keyways, slots, splines, round holes and other internal contours.

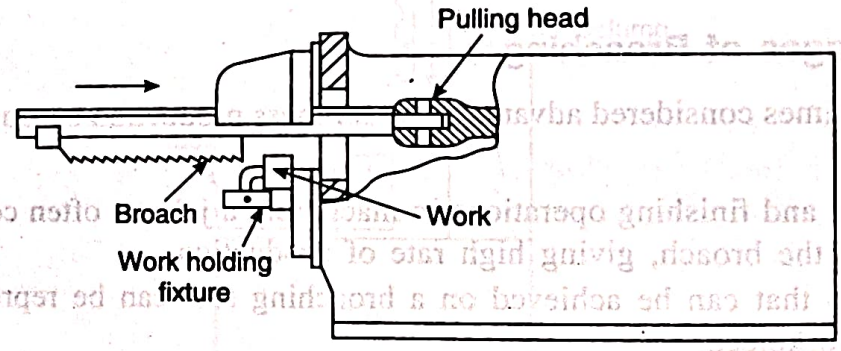

Fig. 6.178 Horizontal broaching machine.

2. **Vertical broaching machines** may be either pull or push type, the latter being more popular. Block diagram of such a machine is shown in Fig. 6.176. They occupy less floor area.
3. **Surface broaching machines** have broaching tools fixed to a ram or rams which are moved in straight path in guide ways past the workpiece. When two rams are used, the machine is called *duplex broach*.
4. **Continuous broaching machines** are used for mass production of small parts. In *rotary continuous broaching machines* (Fig. 6.179), the workpieces are clamped on the table which is rotated continuously and the broach is stationary. In *horizontal continuous broaching machines*, the workpieces move as they are carried by an endless chain (Fig. 6.180) while the broach remains stationary.

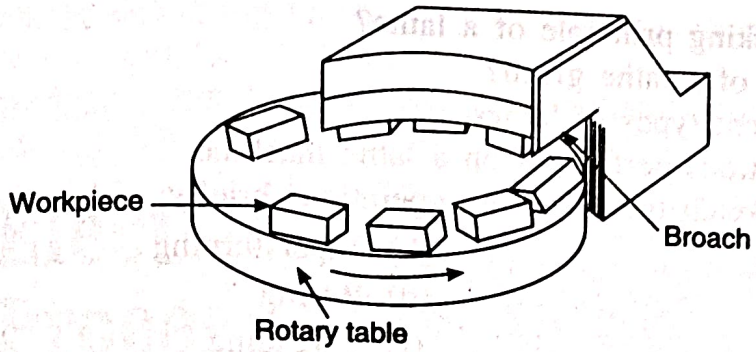

Fig. 6.179 Rotary continuous broaching machine. Workpieces are mounted on a rotary table whereas broach is fixed (stationary).

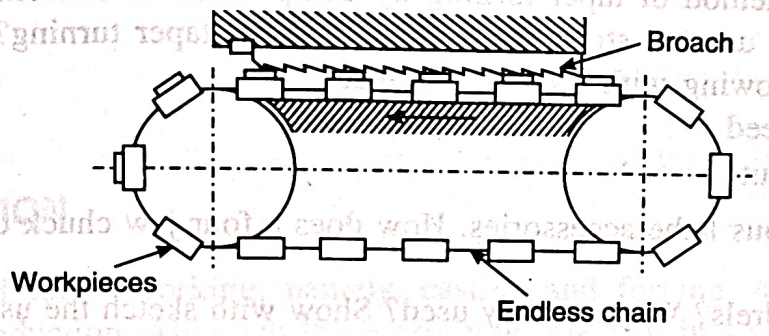

Fig. 6.180 Horizontal continuous broaching machine. Workpieces are mounted on an endless chain as they pass under the stationary broach.

6.26.6 Limitations of Broaching

The following are the limitations of broaching:

(i) The cost of tool is high. Making a broach is an expensive job.
(ii) Very large workpiece cannot be broached.
(iii) Surface to be broached cannot have any obstruction in the way of broach.
(iv) Large stock of metal cannot be removed by broaching.

Finishing Process:-

- Usually 0.25 – 0.50mm of material is removed in most grinding operation. However if a better finish is desired on a job for reason of accuracy, appearance or look or for improved resistance against wear, fatigue, corrosion & better dimensional accuracy of mating parts to get a particular fit than precision surface finish processes (lapping, honing, super finishing, buffing etc) should be employed.
- These microfinishing process make use of an abrasive to remove very small amount of material e.g - 0.005 to 0.01mm in lapping operation. Which is usually much less than grinding process

a) Honing :-

Honing is an abrading process mostly used for polishing bored & reamed holes & also external cylindrical surfaces using bonded abrasive stones (called hones).

- Honning in fact is a cutting operation & is used to remove material less than 0.25mm but some times it can be used to remove stock upto 3mm also.
- Honning is mainly use to correct some out of roundness, taper & tool marks left by previous operation or axial distortion.
- Abrasive grit on hones - Aluminium oxide, Silicon carbide.
- Hones are applied to surface with controlled pressure & with a combination of rotary & reciprocating motion of abrasives.
- The metal frame holding the abrasive is called hone or honing tool head, which may be internal type or external type to perform internal & external honing.
- Honing tool is given slow reciprocating motion at it rotates which results in rapid removal of stock.
- Liberal supply of coolant (sulphurized based oil or lard oil with kerosene) is necessary to keep abrasive clean.

Material honed range from plastics, silver, Al, brass, & cast iron to hard steel & cemented carbide. Tough non ferrous metal cause glazing or clogging of ~~wheel~~ abrasive stick.

- Usual allowance is 0.1 to 0.25mm. Example – honing of cannons, diesel engine cylinder, cylinder head bores of automobile & aeroplane engine cylinder, connecting rod bearing, hub holes in gears etc.

Horizontal honning m/c are used for gun & large bores whereas vertical honing m/c are most common for shorter job. $\phi_{max} = 1500mm$ & $\phi_{min} = 1.5mm$.

b) Lapping :- Finishing process done after grinding. It produce geometrically true shape surface, correct minor surface imperfections, improve dimensional accuracy & provides a very close fit between two contact surface.

- Very thin layer of material (0.005 to 0.01 mm) are removed in lapping, hence unable to correct substantial error in forms & size of surface & is a low efficiency process used only when specified accuracy & surface finish are not obtainable by other methods.
- Lapping are done with the help of lapping shoes, called laps, which are rubbed against the work.
- Lap are made of soft material such as soft cast iron, brass, copper or soft steel is rubbed against the work with abrasive slurry in between. The abrasive slurry contains abrasive powder such as emery, corundum, chromium oxide, iron oxide etc mixed with a special paste, which help to hold the abrasive.
- Lapping can be performed with both hand & m/c, the motion of lap or w/p are being rotary or reciprocating.
- W/p is placed over a lapping medium & rubbed over the same. Movement of the w/p has to be along an irregular path (shape of No. 8)
- Vertical spindle lapping m/c - For flat & round surface

Centreless lapping m/c - Production of round part like piston, pin, bearing race cup, molding disc, limit gauge, shaft etc.

Abrasive belt :- Lapping for lapping bearing & cam using abrasive coated cloth.

Form lapping - When shape of lap is imparted to the work.

c) Super-finishing :-

mostly done for obtaining extremely high quality surface finish along with an almost complete absence of defect in surface layer. It is thus primarily a finishing operation & not a dimensioning operation since only 0.002 to 0.02 mm stock is removed in this operation.

- Considered most efficient in surface refining of cylindrical, flat, spherical & cone shaped part.
- Metal that can be finished by this process are steel, cast iron & non ferrous alloy which have been previously ground/turned.

- Super finishing differs honing in respect of motions involved
Imp. i.e two motion of honing tool whereas it require 5 or even more motion of abrasive tool. The contact surface in super finishing is large & the tool maintain a rotary contact with the work while oscillating also & thus stone motion is multiple, random & very rapid. → Directly proportional to
- finish ∝ (time of contact of stone & workpiece)
- The work rotates & the tool (stone) maintain contact with the work while oscillating as shown. The stone is held in a holder or quill & placed on the workpiece. The spring loaded quill give light pressure of stone on the workpiece. The W/P is rotated at a very slow speed.
- Typical stroke of super finishing tool may be 1 to 5 mm with oscillating frequency of 2 kHz. Superfinishing speed are from 10 to 40 m/min & working pressure is kept at 0.1 to 0.3 MPa.
- Example :- Superfinish of automobile piston, crank shaft journal cam shaft, automobile valve, cylindrical shank of valve tapper etc.

1) Polishing :- Surface finishing operation done for the purpose of removing scratches, tool mark, pit & other defect from rough surface.
- A polishing wheel made of leather, paper or canvas, felt or wool is used with abrasive grain set up with glue or thermo setting resin on the wheel face.
- The work is held against the rotating wheel to give the desired finish. Polishing is very similar to grinding.
- Component to be electroplated are usually polished prior to plating. For lustrous smooth appearance on stainless steel utensil, bright finished hand tools are finished by polishing followed by buffing.

Buffing :- It gives much higher lustrous, reflective finish & is done after polishing. The process consist of applying a very fine abrasive with a rotating wheel made of felt, clothe & leather.
- Abrasive mixed with binder is applied on the buffing wheel or on the work.
- Buffing wheel rotates at a fast speed upto 40 m/sec.
- The abrasive used may include iron oxide, chromium oxide, emery etc. & binder is a paste made of wax mixed with grease, paraffin, turpentine etc.
- Parts made of steel and other hard material are usually ground polished & buffed before electroplating. Sheet of Al, brass & Cu are buffed before plating.

2 FINISHING

2.1 Finishing Processes

as been mentioned earlier that grinding operation is done to finish workpieces which must ow a high quality and accuracy of shape and dimension by removing comparatively small ount of material, usually 0.25 to 0.5 mm in most grinding operations. However, for several plications, grinding does not meet the requirements of accuracy and surface finish. Hence, a better finish is desired on a job for reasons of accuracy, appearance or looks or for nproved resistance against wear, fatigue, corrosion and better dimensional accuracy of mating arts to get a particular fit, then one of the precision surface finishing processes (such as apping, honing, super-finishing, buffing, etc.) should be employed. These micro-finishing rocesses make use of an abrasive to remove very small amount of material (for example, .005 to 0.01 mm in lapping operation) which is much less than that removed even by rinding. Further, these processes are used exclusively for finishing and polishing.

Main finishing processes include honing, lapping, super-finishing, polishing, buffing, burnishing, etc.

Honing

Honing is an abrading process mostly used for polishing bored and reamed holes and also external cylindrical surfaces using bonded abrasive stones (called hones). Honing is, in fact, a cutting operation and is used to remove material less than 0.25 mm but sometimes it is used to remove stock up to 3 mm also. The honing is mainly used to correct some out of roundness, taper and tool marks left by previous operation or axial distortions. Honing is done by means of bonded abrasive grit sticks (of aluminium oxide or silicon carbide) applied to the surface to be honed under controlled pressure and with a combination of rotary and reciprocating motions of abrasives. A typical honing tool-head for vertical honing machines is shown in Fig. 6.156 in which honing stones are loosely held in holders or caged spring type wheel spring is compressed as tool enters bore. Stones are cemented into metal shells which are clamped into holders or cemented directly in the holders. Stones are spaced at regular intervals around the holder. The metal frame holding the abrasives is called *hone* or *honing tool-head* which may be internal type or external type to perform internal and external honing, respectively. Honing tool-head provides a floating action between the work and the tool and any pressure exerted (mechanically or hydraulically) on tool is transmitted equally to all sides. Honing tool is given slow reciprocating motion as it rotates which results in rapid removal of stock and at the same time generation of a straight and round surface. Liberal supply of coolant (sulpherized base oil or lard oil with kerosene) is necessary to keep abrasives clean.

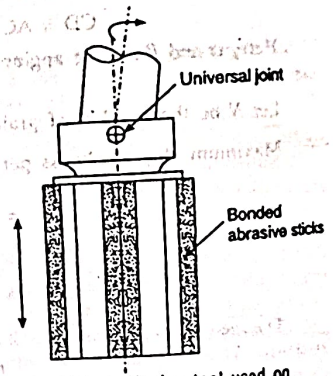

Fig. 6.156 Honing tool used on vertical honing machines.

Materials honed range from plastics, silver, aluminium, brass and cast iron to hard steel and cemented carbides. Tough non-ferrous metals cause glazing or clogging of voids of abrasive stick and are thus difficult to hone. The usual honing allowance is 0.1 to 0.25 mm generally. Examples of honing work include bores of cannons, diesel engine cylinders, cylinder head bores of automobiles and aeroplane engine cylinders, connecting rod bearings, hub holes in gears, etc.

Honing can be done manually wherein the tool is rotated and the work is passed back and forth over the tool [Fig. 6.156(a)]. Honing can be done on general purpose machines such as lathe, drill press, portable drills, etc. Special honing machines are available for production work. These are horizontal and vertical type. A honing machine rotates and reciprocates the hone inside (or outside) the hole being finished. Horizontal machines are used for guns and large bore. Vertical honing machines are more common for shorter jobs. Maximum bore size that can be honed conveniently is about 1500 mm and minimum size is 1.5 mm in diameter. Several holes may be honed on multi-spindle machines.

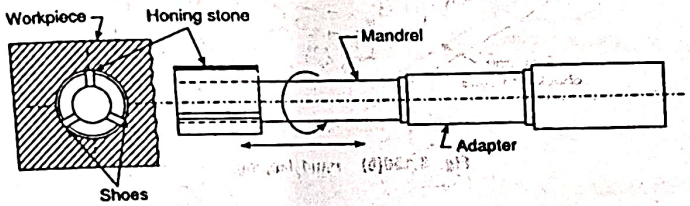

Fig. 6.156(a) A manual honing tool.

Lapping

Lapping is a finishing process and is done after grinding. Lapping produces geometrically true surfaces, corrects minor surface imperfections, improves dimensional accuracy and provides a very close fit between two contact surfaces. Since very thin layers of metal (0.005 to 0.01 mm) are removed in lapping, it is, therefore, unable to correct substantial errors in form and sizes of surfaces and is a low efficiency process used only when specified accuracy and surface finish are not obtainable by other methods.

Most lapping is done with the help of lapping shoes, called *laps*, which are rubbed against the work. The lap made of soft material such as soft cast iron, brass, copper or soft steel is rubbed against the work with abrasive slurry in between. The abrasive slurry contains abrasive powder such as emery, corundum, chromium oxide, iron oxide, etc. mixed with a *vehicle* (i.e. lubricant used to hold abrasives which may be olive oil, lard oil or mineral oil) or special pastes with some carrier. Laps may be operated by hand or machine, the motion being rotary or reciprocating. In hand lapping [Fig. 6.156(b)], either the lap or the workpiece is held by hand or motion of other enables rubbing of two surfaces in contact. Lapping compound is spread over grey cast iron plate. Grey cast iron, being porous, retains the abrasive grains (lapping medium). Workpiece is placed over the lapping medium and rubbed over the same. Movement of the workpiece has to be along an irregular path (shape of No. 8). A lathe or dense may be used for lapping cylindrical work wherein the lap is reciprocated over the work in an ever-changing path. Flat surfaces may be lapped by holding work against

a rotating disc or work may be removed by hand in an irregular path over a stationary face plate lap. Lapping machines available for the job are (a) *vertical spindle lapping machine* [Fig. 6.156(c)] used for lap flat and round surfaces between two opposed laps on vertical spindles, (b) *centreless lapping machine* for continuous production of round parts like piston pins, bearing races, cups, molding discs, limit gauges, shafts, etc. and (c) *abrasive belt lapping* for lapping bearings and cams using abrasive coated clothes. Lapping may be *equalizing lapping* when work and lap mutually improve their shapes and surface, or *form lapping* when shape of lap is imparted to the work.

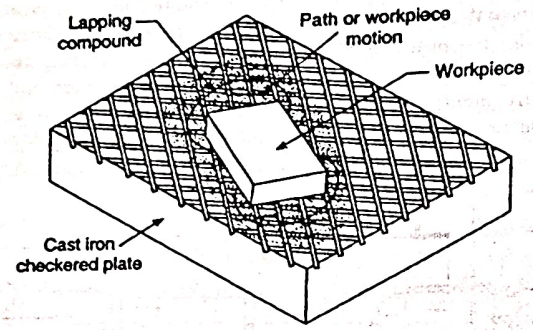

Fig. 6.156(b) Hand lapping.

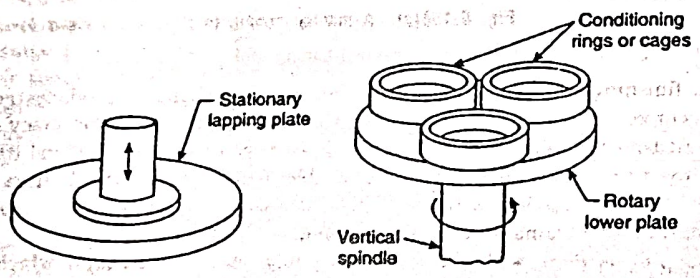

Fig. 6.156(c) Vertical spindle lapping machine.

Super-finishing

Super-finishing is mostly done for obtaining extremely high quality surface finish along with an almost complete absence of defects in surface layer. It is thus primarily a finishing operation and not a dimensioning operation since only 0.002 to 0.02 mm stock is removed in this operation. It is considered most efficient in surface refining of cylindrical, flat, spherical and cone shaped part. The metals that can be finished by this process are steel, cast iron and non-ferrous alloys which have been previously ground or precision turned. Super-finishing differs in one main aspect that whereas honing involves two motions of honing tool, the super-finishing requires three to five or even more motions of the abrasive tool. The contact

surface in super-finishing is large and the tool maintains a rotary contact with the work while oscillating also and thus stone motion is multiple, random and very rapid. The finish obtained on the work surface depends on the time for which the stone is the contact with work. The reversal of the stroke is short as compared to long stroke of hone leading to the accumulation of a large amount of chips.

Super-finishing is shown in Fig. 6.157. The work rotates and the tool (stone) maintains contact with the work while oscillating as shown. The stone is held in a holder or quill and placed on the workpiece. The quill is spring loaded to give light pressure of stone on the workpiece. The workpiece is rotated at a very slow speed. As the workpiece rotates, the stone block reciprocates forwards and backwards at a rapid rate, resulting into an oscillating motion of stone. Suitable lubricant is used. Typical stroke of super-finishing tool may be 1 to 5 mm with oscillating frequency of 2 kHz. The abrasive stick or stone used is of very fine grit (400 to 600). Super-finishing speeds used are from 10 to 40 m/min and the working pressure is kept as 0.1 to 0.3 MPa. A special lubricant, usually a mixture of kerosene and oil, is used to obtain a high quality of surface finish.

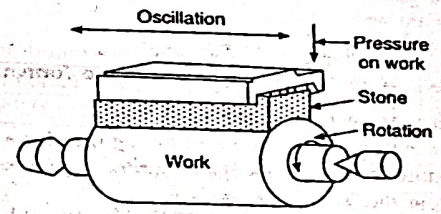

Fig. 6.157 Operation of super-finishing.

Examples of super-finishing work include automobile pistons, crank shaft journals, cam shafts, automobile valves, cylindrical shanks of valve tappets, etc.

Super-finishing is sometimes done on lathe, but special purpose super-finishing machines are available for the job.

Polishing

Polishing is a surface finishing operation done for the purpose of removing scratches, tool marks, pits and other defects from rough surfaces. A polishing wheel made of leather, paper or canvas, felt or wool is used with abrasive grains set-up with glue or thermo setting resins on the wheel face. The work is held against the rotating wheel to give the desired finish. Polishing is very similar to grinding and the work is applied by hand to wheels mounted on floor stand girders. Except honing, lapping and super-finishing, polishing may follow any of the machining methods.

Only a very small amount of metal is removed in polishing. Components to be electroplated are usually polished prior to plating. For lustrous smooth appearance on stainless steel utensils, bright finished hand tools are finished by polishing followed by buffing.

Buffing

Buffing gives much higher lustrous, reflective finish and is done after polishing. The process consists of applying a very fine abrasive with a rotating wheel made of felt, clothe and leather.

10 मशीन टूलों का संस्थापन तथा परीक्षण (INSTALLATION AND TESTING OF MACHINE TOOLS)

विषयनिष्ठ प्रश्नोत्तर

प्रश्न 1. मशीनों में फाउन्डेशन की आवश्यकता के कारण बताइए। फाउन्डेशन बोल्ट्स के ग्राउटिंग चित्र के द्वारा तैयार करने की विधि का उल्लेख कीजिये तथा इसकी मशीन लाइफ पर पड़ने वाले प्रभावों को समझाइये।

किसी मशीन औजार को स्थापित करते समय प्रयुक्त किये जाने वाले फाउन्डेशन बोल्ट्स का ग्राउटिंग चित्र सहित समझाइये। (S/1994, 98)

मशीन फाउन्डेशन तैयार करने की विधि समझाइये। मशीन फाउन्डेशन का मशीन की लाइफ एवं उसके उत्पाद पर पड़ने वाले प्रभाव बताइये। (1998)

मशीनों में फाउन्डेशन की आवश्यकता समझाइये। स्वच्छ चित्र की मदद से सेन्ट्रल लेथ मशीन की फाउन्डेशन विधि समझाइये। (2002,S/04)

उत्तर – नींव की आवश्यकता के मुख्य कारण निम्नलिखित हैं –

(i) मशीन टूल के भार को सहन करना तथा उसको आधार प्रदान करना,

(ii) मशीन टूल के सभी अवयवों को एक-दूसरे के सापेक्ष मूल स्थिति में अवस्थापित (located) रखना,

(iii) मशीन टूल के परिचालन तंत्र (driving system) का संरेखण बनाए रखकर उसको मृसुण चालन (smooth running) प्रदान करना,

(iv) प्रत्यागामी तथा घूर्णी द्रव्यमानों (masses) के कारण असंतुलित बलों द्वारा उत्पन्न कम्पनों का अवशोषण करना।

विधि – नींव के लिए गर्त खोद कर, पहले बालू, गिट्टी, स्लैग या बजरी (gravel) का पैड बिछाकर उनकी कुटाई (ramming) की जाती है। कंक्रीट ढलाई के लिए चिकने बोर्ड का फर्मा, गर्त की दीवारों के सहारे रखा जाता है। फिर ड्रॉइंग के आधार पर नींव के बोल्टों के स्थान पर लकड़ी के प्लग स्थापित किए जाते हैं। प्लग अनुभागीय (sectional) होते हैं, जिससे कंक्रीट करने के पश्चात् इनके निकालने में सुविधा रहे। यदि आवश्यक हो, तो गर्त में प्रबलन प्रदान किया जा सकता है। कंक्रीट भरने के समय कम्पनों का उपयोग किया जाता है। कंक्रीट डालने का कार्य क्षैतिज परतों के रूप में, बिना रूके पूर्ण किया जाता है, जिससे एकीकृत संरचना उपलब्ध हो सके।

कंक्रीट की लगभग 50 प्रतिशत सामर्थ्य लगभग 3 से 5 दिनों में उपलब्ध हो जाती है नींव पर मशीन टूल का स्थापन यथार्थ होगा, यह लगभग असंभव होता है। इसलिए मशीन टूल को नींव पर रखने के पश्चात् उसका समतलन (levelling) करना आवश्यक होता है। मानक यथार्थता वाले मध्यम तथा हल्के मशीन टूलों के लिए 0.3 से 3.0 मिमी मोटाई के पृथक पैडों (pads) या अंतरालक (spacers) अथवा समतलन वेजों (wedges) का उपयोग किया जाता है। भारी तथा परिशुद्ध मशीन टूलों के लिये समतलन शूज तथा ढलवाँ लोहे की भारी नींव प्लेटों (foundation plates) का उपयोग किया जाता है।

(i) मशीन टूल के प्रत्यागामी तथा घूर्णी बल असंतुलित हो जाते हैं।

(ii) कम्पनयुक्त बलों का उत्पाद तथा औजार पर उपयुक्त संचरण नहीं होने पाता है।

(iii) मशीन टूल की नींव द्वारा अन्य मशीनों में कम्पन गतियों का संचरण प्रारंभ हो जाता है।

(iv) कर्तन प्रक्रम, शीर्ष स्कंध तथा पुच्छ स्कंध की दृढ़ता तथा परिवर्ती छीलन मोटाई में स्वोत्तेज़ित कम्पनों–चैटर (self excited vibrations-chatter) का उत्पन्न होना प्रारंभ हो जाता है।

(v) घर्षणी विश्रांति कम्पन (frictional relaxation vibration) द्वारा स्टिक स्लिप (stick-slip) उत्पन्न होने के फलस्वरूप परिशुद्ध औजारों की सुग्राहिता पर हानिकारक प्रभाव होना प्रारंभ हो जाता है।

(vi) मशीन टूल के उच्च चाल तथा भरणों के उपयोग की सीमा घट जाती है।

(vii) मशीन टूल का कार्यकाल घट जाता है।

(viii) औजारों के द्रुत गति से विफल होने के फलस्वरूप उत्पादक क्षमता क्षीण हो जाती है।

उत्पाद की यथार्थता पर नींव का प्रभाव – नींव के स्थिर न रहने के फलस्वरूप मशीन टूल के कम्पनों में वृद्धि हो जाती है, जिससे उत्पाद की कोटि तथा उत्पादकता पर निम्नलिखित विपरीत प्रभाव होते हैं –

(i) सब उत्पाद ज्यामितीयत: एक समान निर्मित नहीं होने पाते हैं।

(ii) उत्पाद में विमीय यथार्थता प्राप्त करना कठिन हो जाता है।

(iii) उत्पादों की पृष्ठ परिष्कृति की हीनता में वृद्धि होती है।

(v) उत्पादों की उत्पादन दर घट जाती है।

ग्राउटिंग के लिए प्राय: शुद्ध सीमेन्ट (pure cement) का क्रीमी मिक्स्चर (creamy mixture) भरा जाता है ताकि आधार (base) तथा कंक्रीट (concrete) के बीचके खाली स्थान (voids) अच्छी प्रकार से भर जायें। इससे अपेक्षाकृत अधिक आलम्बन क्षेत्रफल (large supporting area) प्राप्त होता है।

ग्राउटिंग को सामान्य तौर पर चार दिन तक सैट होने दिया जाता है। गरम वातावरण में यह जल्दी सूखता है परन्तु इसमें दरारें विकसित हो जाती हैं। दरारों से बचने के लिए सतह को गीली बोरियों (damp sacking) से ढका जाता है।

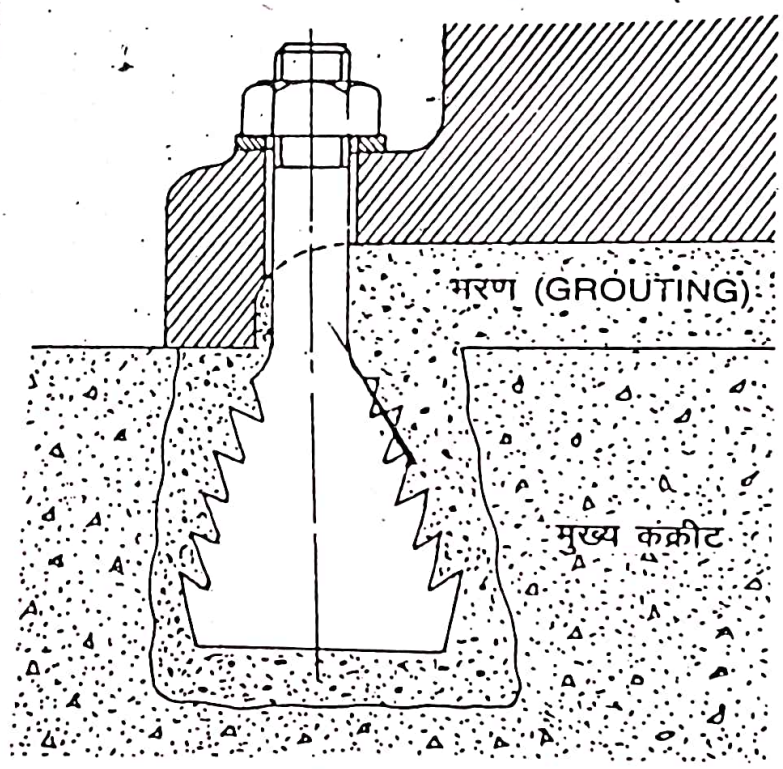

चित्र 10.1 ग्राउटिंग

प्रश्न 2. मशीन टूलों की नींव को कौन से कारक प्रभावित करते हैं ?

उत्तर – मशीन टूल की नींव को प्रभावित करने वाले कारक निम्नलिखित होते हैं –

(i) मशीनों का प्रकार अर्थात् भार, आकार, आकृति तथा उपयोग आदि,

(ii) मशीन का स्थान निर्धारण,

(iii) भूमि की प्रकृति जैसे पंक (mud), गाद (silt), पीट, चट्टान (rock), अथवा कृत्रिम पूरक,

(iv) नींव डालने के लिए उपलब्ध सुविधाएँ, जैसे – आवश्यक मशीनरी, कुशल कारीगर, उचित सामग्री आदि,

(v) प्रारंभिक लागत,

(vi) आस-पास के क्रिया-कलापों (activities) का प्रभाव,

(vii) भविष्य की सक्रियताओं (activities) का प्रभाव,

(viii) परिवहन सुविधाऐं आदि।

प्रश्न 3. मशीन नींव की डिजाइन करते समय किन-किन बातों का विचार किया जाता है ?

उत्तर – मशीन नींव की डिजाइन करते समय निम्नलिखित बातों का विचार किया जाता है-

(i) नींव की गहराई,

(ii) आधार क्षेत्रफल,

(iii) नींव का वजन,

(iv) फुटिंग का प्रकार (type of footing),

(v) कम्पन,

(vi) पृथक्करण के तरीके,

(vii) अन्य व्यवस्थाएँ जैसे जकड़ बोल्ट, खड्डे, डक्ट व सुरंगें आदि।

प्रश्न 4. मशीन टूल की नींव के संदर्भ में भूमि की भार धारण क्षमता से क्या अभिप्राय है ?

मिट्टी सहन क्षमता पर संक्षिप्त टिप्पणी लिखिये। (1999)

उत्तर – भूमि के धारक दाब (bearing pressure) की परास अत्यधिक विशाल होती है। महत्वपूर्ण मशीन टूलों की नींव के लिये भूमि की प्रकृति जानना आवश्यक होता है। यह बोरिंग्स तथा परीक्षण गर्तों (borings and test pits) द्वारा ज्ञात किया जाता है। यदि भूमि मध्यम या मृदु मृत्तिका (clay) अर्थात् चिकनी मिट्टी की प्रकृति की होती है, तब नींव के स्तर (strata) से भूमि के नमूनों का संपीडन परीक्षण (consolidation tests) के आधार पर स्थिरण विश्लेषण (settlement analysis) करना आवश्यक होता है। क्योंकि पंक (mud), गाद (silt), पीट (peat) या कृत्रिम पूरक (artificial filling) वाली भूमि पर बिना विशेष व्यवस्था के कोई भी स्थायी संरचना उपयुक्त नहीं होती है। ऐसे स्थलों के भवन तथा मशीनरी की नींव में कम्पनों के फलस्वरूप भूमि संपीडन तथा पुनर्विन्यास (rearrangement) के लिए अधिदेय (allowance) दिया जाना आवश्यक होता है। भूमि के प्रकार, सरंध्रता तथा संतृप्ति के आधार पर अनुमेय औसत दाब 1 से 6 किलो प्रति वर्ग सेमी पर्याप्त होता है।

यदि मशीन टूल का भार कम होता है और उसके प्रचालन में गतिक भार नहीं होने या नगण्य होने की संभावना होती है, तब उसकी नींव में किसी विशेष प्रबंध की आवश्यकता नहीं होती है। अधिकांश मशीन टूल जैसे लेथ, ड्रिल प्रेस तथा अन्य मानक यथार्थता की मशीनों, जिनका भार 1·5 या 2·0 टन तक होता है और जिनका संस्तर या कॉलम सुदृढ़ होता है तथा जिनकी लम्बाई से ऊंचाई का अनुपात 2 से कम होता है, के लिए 150 से 250 मिमी मोटाई का कंक्रीट फर्श, नींव के लिए उपयुक्त पाया जाता है। यदि शाला (shop) में कंक्रीट का फर्श नहीं है, तब

00 मिमी मोटा कंक्रीट का फर्श, जिसका प्लान 4×4 वर्ग मीटर हो पर्याप्त रहता है। जब मशीन ल अन्य उत्पादन मशीनों की रेखा में होते हैं, तब 1·5 से 3·0 मीटर चौड़ी, तथा 6 मीटर लम्बी क्रीट की स्ट्रिप अथवा 300 से 400 मिमी मोटी कंक्रीट की नींव पर्याप्त रहती है।

भूमि पर पड़ने वाला दाब, निम्नलिखित सूत्र से ज्ञात किया जाता है –

$$\alpha = cf_i$$

जबकि, c = गुणांक, जो भूमि की प्रकृति पर निर्भर करता है

f_i = भार का विभिन्न बिन्दुओं पर विक्षेप (deflection)

प्रश्न 5. मशीन टूल की नींव के अन्तर्गत फुटिंग (footing) से क्या तात्पर्य है ?

उत्तर – फुटिंग या सोपान का उद्देश्य मशीनरी तथा भवनों की दीवारों तथा कॉलमों के केन्द्री भार (concentrated loads) को भूमि के ऊपर इस प्रकार वितरित करने से होता है, जससे इकाई दाब (unit pressure) अनुज्ञेय सीमाओं (permissible limits) तक सीमित किया ा सके। ये फुटिंग कंक्रीट से निर्मित की जाती है। मशीन टूल की प्रकृति तथा प्रकार के आधार र फुटिंग के लिए उपयुक्त आधार, भूमि तल से 1 से 5 मीटर नीचे तक हो सकता है। सादा टिंग के लिए $1 : 2\frac{1}{2} : 5$ अनुपात का कंक्रीट उपयोग किया जा सकता है।

प्रश्न 6. मशीन टूल के अभारण के लिये किन-किन युक्तियों का उपयोग किया जाता ?

उत्तर – पुली ब्लॉक को लटकाने के लिए धरण अर्थात् गर्डर (girder) अथवा कैन्टीलीवर ीम (cantilever beam) का उपयोग किया जा सकता है, चित्र 10.2 में अभारण की विधियाँ ाई गई हैं।

उपरोक्त सुविधा न होने पर परिवाहनी उपकरणों (transportable equipment) जैसे गैन्ट्री gantry), डेरिक (derric) या अपरूपण पाद (shear legs) का उपयोग किया जा सकता है।

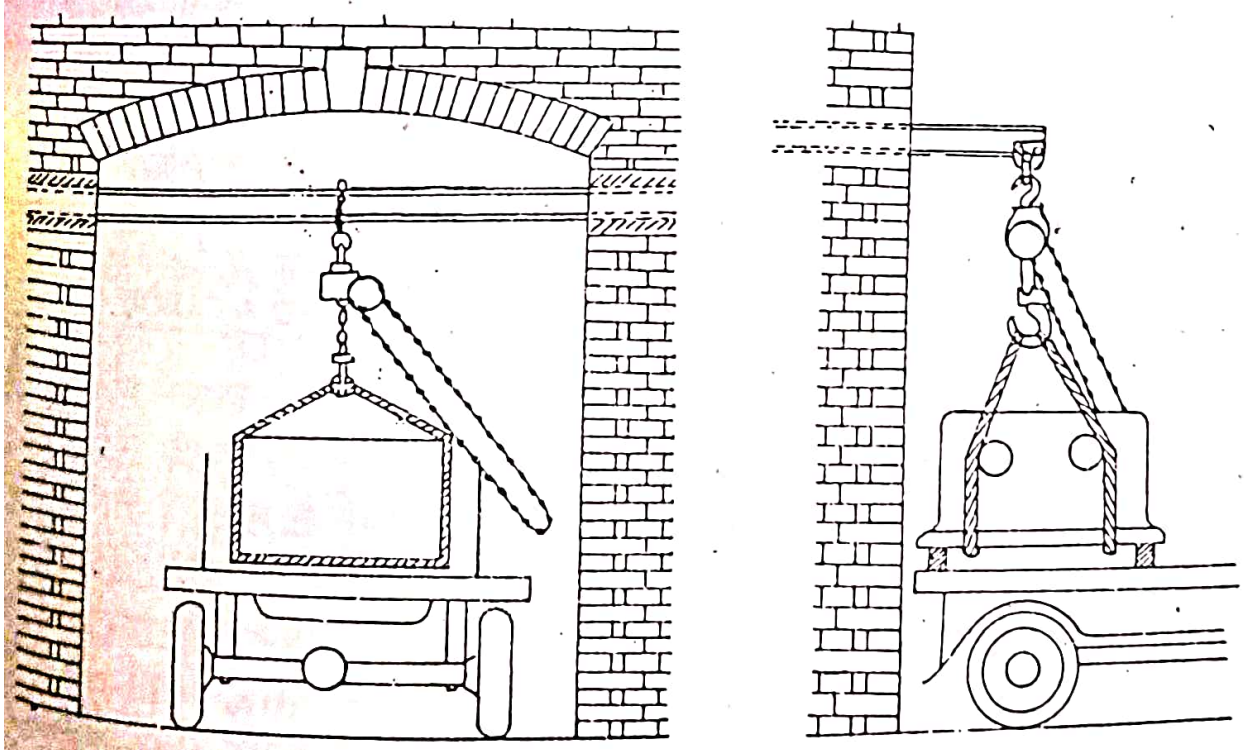

गर्डर का उपयोग
(USE OF GIRDER)

कैन्टीलीवर बीम
(CANTILEVER BEAM)

चित्र 10.2 अभारण की विधियां

अभारण के लिए रैम्प (ramp) का भी उपयोग किया जा सकता है। मशीन के भार को सहने के लिए विभिन्न प्रकार की स्लिंग (slings) (जैसे रस्सी, तार या चेन) का उपयोग किया जाता है। नींव प्लान (foundation plan) निर्मित होने के पश्चात् मशीन को स्लिंग के उपयोग से ऊपर उठाया जाता है। इसके लिए प्राय: हैम्प रस्सों का उपयोग किया जाता है। जिससे मशीन क्षतिग्रस्त न होने पाए।

प्रश्न 7. मशीन टूल के क्षैतिज संचलन के लिए कौन-सी युक्तियाँ प्रयुक्त की जा सकती हैं ?

उत्तर – मशीन टूल को संस्थापन के लिए उसके निर्धारित स्थल पर ले जाने के लिए, उसका क्षैतिजत: संचलन या सरकाना आवश्यक होता है। इसके लिए बेल्लनों (rollers) का उपयोग किया जाता है। ये इस्पात की ट्यूबें या ठोस छड़ें (30 से 50 मिमी व्यास) हो सकती हैं। थोड़ा सा सरकाने के पश्चात ट्यूब या छड़ को पीछे से निकाल कर आगे मशीन के नीचे प्रवेश करा दिया जाता है।

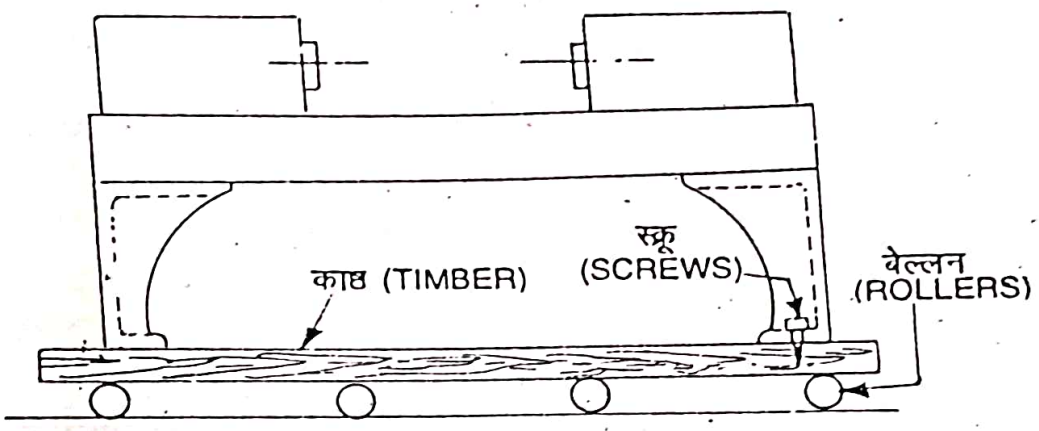

चित्र 10.3 बेल्लनों द्वारा संचलन के लिए मशीन टूल का काष्ठ पर आरोपण

लकड़ी के लट्ठों का उपयोग पैकिंग करने, स्किडों, मशीन के पादों के नीचे रखकर, बेल्लनों के ऊपर संतत आधार प्रदान करने के लिए किया जा सकता है, (चित्र 10.3)।

प्रश्न 8. मशीन टूल की ज्यामितीय यथार्थता से क्या अभिप्राय होता है ?

मशीन टूल की ज्यामितीय यथार्थता का परीक्षण पर संक्षिप्त टिप्पणी लिखिये।

(1998)

उत्तर – ज्यामितीय जांच/ परीक्षण से अभिप्राय सभी घटकों (componen's) की आकृतियों की विमाओं (dimensions), तथा स्थितियों तथा उनके एक दूसरे के पेक्ष विस्थापन (displacement) की जांच से होता है। यहाँ यह विचारणीय है कि ज्यामितीय रिभाषाऐं अमूर्त (abstract) होती हैं, तथा उनका संबंध अधिकल्पित रेखाओं (imaginary lines) तथा पृष्ठों (surfaces) से होता है। इसलिए अभ्यास (practice) में मापिकीय परिभाषाओं (metrological definitions) का उपयोग किया जाता है, जिनका संबंध वास्तविक रेखाओं तथा पृष्ठों से होता है, जो मापन (measurement) के लिए अभिगम्य (accessible) होती हैं। मापिकीय परिभाषाओं के अंतर्गत् एक परिणाम (result) में सभी स्थूल तथा सूक्ष्म ज्यामितीय त्रुटियों (macro and micro geometrical errors) का समावेश हो जाता है, जिनसे सभी त्रुटियों के कारणों के परिणाम (result) उनके एक दूसरे से विभेदन (distinguish) किये बिना ही ज्ञात हो जाते हैं।

प्रश्न 9. मशीन टूल के समतलन तथा संरेखण (levelling and alignment) की विधि समझाइये।

उत्तर – मशीन टूल के भरण (grouting) के पश्चात् नींव पर रखने के उपरांत उसका समतलन तथा संरेखण किया जाता है। इसको मशीन टूल का संस्थापन तथा स्थापन (installation and erection) कहा जाता है।

नींव निर्मिति के उपरांत मशीन को समतलन (levelling) तथा संरेखन (alignment) के लिए यथा स्थान रखा जाता है। इसके लिए मशीन के बोल्टों से बद्ध करने वाले छिद्रों को, नींव के बोल्टों में प्रवेश कराया जाता है, तथा बोल्टों पर ढिबरियां चढ़ा कर, ढीली ही छोड़ दिया जाता है। कंक्रीट को सेट होने के लिए तीन या चार दिन दिये जाते हैं, यद्यपि कंक्रीट की पूर्ण कठोरता के लिए बीस दिन से अधिक समय की आवश्यकता होती है।

स्पिरिट लेविल (spirit level) के प्रयोग से मशीन को पूर्ण क्षैतिज स्थिति में अवस्थित किया जाता है। स्पिरिट लेविल का प्रयोग, मशीन के मापन क्षेत्रों जैसे लेथ का संस्तर, मिलीयन तथा अपघर्षण यंत्रों की कार्य मेज आदि में, अनुदैर्ध्य (lonitudinal) तथा क्रॉस (cross) दिशाओं में किया जाता है। यदि मशीन के पृष्ठ क्षैतिज नहीं होते तब मशीन के संस्तर (आधार) के निचले भाग में बेजों (फन्नियों) (wedges) का प्रयोग किया जाता है। मशीन के आदृढ़न होने (setting down) के लिए एक या दो दिन का समय देकर, पुनः उसकी लेविल का परीक्षण किया जाता है। लेकिन स्वीकार्य (aceptable) होने पर आधार तथा कंक्रीट के मध्य की रिक्तियों को भरने के लिए शुद्ध सीमेन्ट के घोल का प्रयोग किया जाता है। कुछ दिनों में सीमेन्ट के घोल का भरण (grouting) कठोर हो जाता है। वेजों को निकाल कर नटों को कस दिया जाता है। इसके उपरांत भी मशीन का स्पिरिट लेविल पुनः परीक्षण किया जाता है।

प्रश्न 10. मशीन औजारों की यथार्थता के परीक्षण के अन्तर्गत कौन-से परीक्षण किये जाते हैं ?

उत्तर – ज्यामितीय जांच/परीक्षण के अंतर्गत निम्नलिखित परीक्षण किये जाते हैं–

(i) सरलता/सीधापन (Straightness) – सरलता की जांच के लिए तीन प्रकार के परीक्षण किये जाते हैं –

(अ) एक रेका की दो तलों (planes) में सरलता (straightness),

(ब) मशीन टूलों के सर्पी मार्गों (slideways) की सरलता,

(स) सीधी रेखा में संचलन (movement)।

(ii) समतलता (Flatness) – समतलता की जांच में सर्पी मार्गों तथा मशीन की मेजों का निश्चित सीमा में समतलता का परीक्षण किया जाता है।

(iii) समांतरता (Parallelism) – समांतरता जांच के अंतर्गत् दो प्रकार के परीक्षण आते हैं–

(अ) रेखाओं तथा तलों की समांतरता,

(ब) समांतर संचलन।

(iv) समदूरस्थता (Equidistance) – समदूरस्थता की जांच से अभिप्राय अक्षों (axes) तथा संदर्भ/निर्देश तल (reference plane) के मध्य की दूरी के परीक्षण से होता है।

(v) सम्पात या संरेखण (Coincidence or Alignment) – संपात अथवा संरेखण से अभिप्राय दो अक्षों का एक दूसरे में विलय (merge) होने से होता है, जब एक अक्ष दूसरी अक्ष के पार विस्तार (extend) करती है।

(vi) वर्गता या सरल रेखी संचलन (Squarentss or Rectilinear Motion) - वर्गता अथवा सरल रेखी जांच के अंतर्गत् निम्नलिखित परीक्षण आते हैं-

(अ) सरल रेखाओं तथा तलों की वर्गता का परीक्षण,

(ब) गति की लम्बता (perpendicularity) का परीक्षण।

(vii) घूर्णन (Rotation) - घूर्णन जांच में निम्नलिखित परीक्षण किये जाते हैं-

(अ) गोल नहीं होना (out of round),

(ब) उत्केन्द्रता (eccentricity),

(स) एक निश्चित बिन्दु पर अक्ष का त्रिज्यीय या अरीय प्रक्षेप (radial throw),

(द) आवर्ती अक्षीय सर्पण (peiodical axial slip),

(इ) कैमिंग, समतल पृष्ठ (plane surface) का वह दोष होता है, जिसमें वह एव अक्ष के प्रति घूर्णन करने पर इस अक्ष के लम्बतल में नहीं रहता।

प्रश्न 11. मशीन टूल्स पर चौकोरपन का निरीक्षण (squareness checks) करने के लिए विभिन्न विधियों को चित्र की सहायता से समझाइये।

उत्तर - चित्र 10.4।

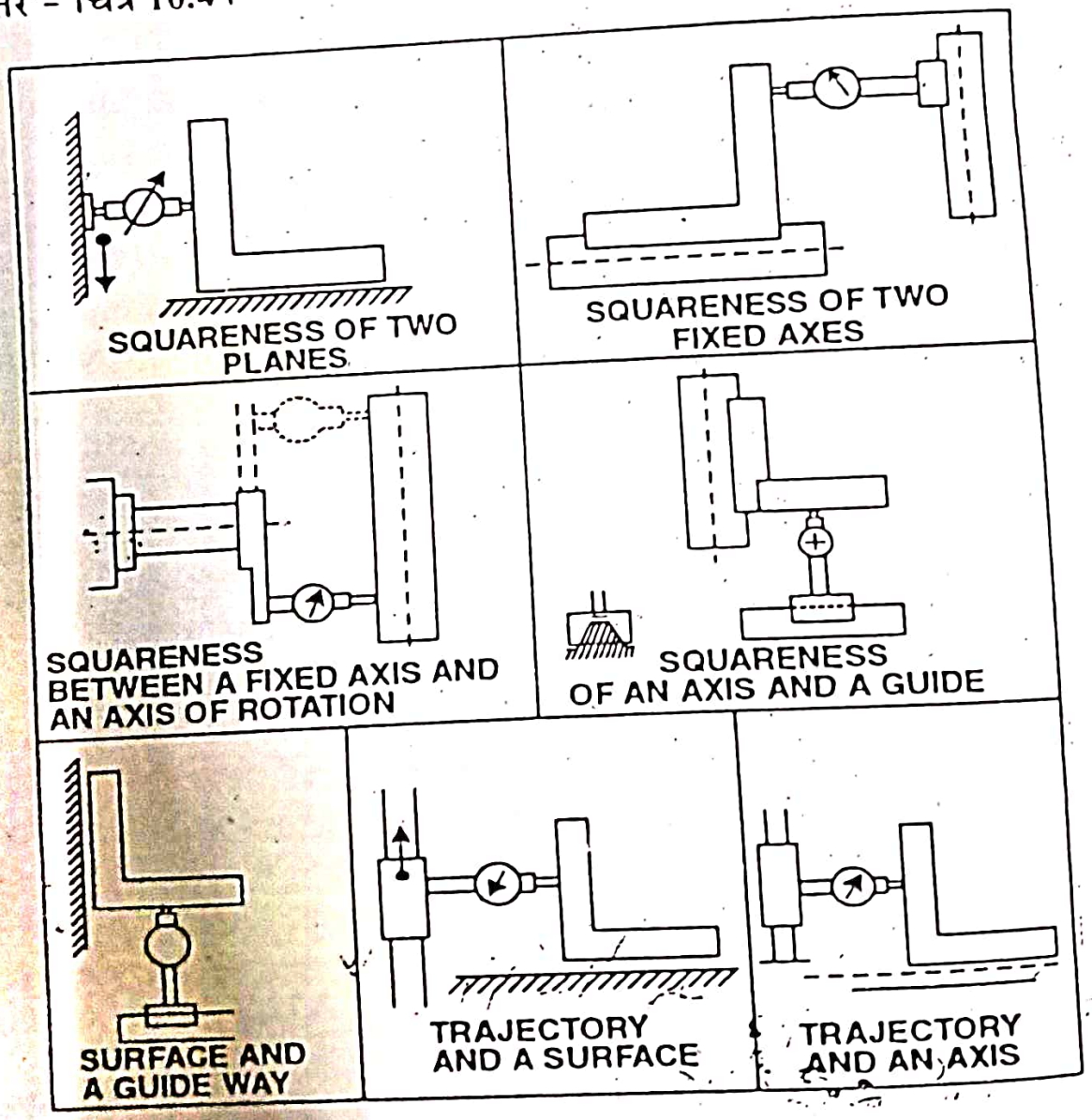

चित्र 10.4

प्रश्न 12. मशीन की यथार्थता के परीक्षण के लिये कौन-कौन से औजार तथा उपसाधन आवश्यक होते हैं ?

उत्तर - मशीन टूल की यथार्थता परीक्षण के लिए कई प्रकार के मापन यंत्रों या उपस्करों का प्रयोग किया जाता है। इनका चयन इस प्रकार किया जाता है, जिससे विनिर्दिष्ट दशाओं में यथार्थता की आपेक्षित कोटि का मापन किया जा सके। इस कार्य के सामान्य औजार तथा उपसाधन निम्नलिखित हैं-

(i) डायल गेज (Dial Gauge) - डायल गेज को दृढ़ आधारों तथा दंडों पर आरोपित किया जाना चाहिये, जिससे प्रघात तथा कम्पन (shock and vibration) के प्रति उसमें स्थायित्व (stability) उपलब्ध हो सके। गेज के अंशांकन साफ व 0·01 मिमी से सूक्ष्मतर होना चाहिये।

(ii) स्पिरिट लेविल (Spirit Level) - माइक्रोमीटर स्क्रू या अंशांकन रेखाओं वाली स्पिरिट लेविल का प्रयोग किया जा सकता है। स्पिरिट लेविल की सुग्राहिता या संवेदनशीलता (sensitivity), एक मीटर में एक मिमी झुकाव (tilt) के लिए बुलबुला (bubble) के विस्थापन (displacement) से व्यक्त की जाती है। मशीन टूलों के परीक्षण में लेविल की यथार्थता 5 से 10 माइक्रोन प्रति मीटर तथा सुग्राहिता 30 से 50 मिमी की होनी चाहिए। इन लेविलों के धारक पृष्ठ भी चौड़े होने चाहिये।

(iii) सरल पट्टियां तथा वर्ग (Straight Edges and Squares) - मशीन टूलों के परीक्षण के लिए सरल पट्टियों के धारक पृष्ठ चौड़े होने चाहिये। सरल पट्टियाँ ढलवाँ लोहे या इस्पात की भारी, समर्थ पर्शुकाओं (ribs) वाली तथा आंतरिक प्रतिबलों से मुक्त होना चाहिए।

मानक वर्ग की त्रुटि ±'0·01 मिमी से कम तथा परिशुद्ध वर्ग की त्रुटि ± 0005 मिमी से कम होना चाहिए।

(iv) परीक्षण मेन्ड्रेल (Test Mandrel) - नये मशीन टूलों के निर्माण तथा स्वीकारी परीक्षणों (acceptance tests), तथा पुराने मरम्मत किये जाने वाले मशीन टूलों के परीक्षणों के लिए परीक्षण मेन्ड्रेलों का विशाल रूप से उपयोग किया जाता है।

परीक्षण मेन्ड्रेल इस्पात की खरादन की हुई (turned), तथा अपघर्षित (ground), खोखली (hollow) तथा शंकुरूप शैंक (conical shank) गोल छड़ें होती हैं, जिनका कठोरीकरण तथा प्रतिबल निवारण किया हुआ होता है। शंकुरूप शैंक को परीक्षण की जाने वाली मशीन के सॉकेट (socket) में प्रवेश कराया जाता है। इसका बेलनाकार पिंड (body) का उपयोग मापन के लिए निर्देश पृष्ठ/संदर्भ तल (reference plane) का कार्य करता है।

परीक्षण मेन्ड्रेल दो प्रकार के होते हैं-

(अ) बेलनाकार मापन पृष्ठ तथा टेपरित शैंक वाले मेन्ड्रेल, जिनके सिरों को मुख्य तर्कु के टेपरित छिद्र में प्रवेश कराकर धारित किया जाता है।

(ब) बेलनाकार मेन्ड्रेल, जिनके सिरों को केन्द्रकों (centres) के मध्य धारित किया जाता है। मेन्ड्रेल के बेलनाकार भाग के दोनों सिरों के चिन्हों के मध्य की दूरी जो 75, 150, 200, 300 या 500 मिमी हो सकती है, मेन्ड्रेल की मापन लम्बाई होती है।

(v) अन्य उपस्कर (Other Equipment) - मशीन टूलों के परीक्षण के लिए निम्नलिखित मापन यंत्र या उपस्कर भी उपयोगी होते हैं-

(अ) सूक्ष्मदर्शी (microscope),

(ब) सूक्ष्ममापी (micrometer),
(स) दूरदर्शक (telescope),
(द) स्वतः समांतरित्र (auto collimator),
(इ) गेज ब्लॉक (gauge block),
(फ) विशिष्ट अनुबंध (special fixture),
(च) भार तथा पुली सहित तन्य तार (taut wire)।

प्रश्न 13. भार परीक्षण एवं प्रोडक्ट परीक्षण पर संक्षिप्त टिप्पणी लिखिये। (S/1998, 99)

उत्तर – भारण परीक्षण तथा उत्पाद परीक्षण से अभिप्राय ऐसे परीक्षण कार्यखंडों के मशीनन करने से होता है, जिस प्रकार के उत्पादों के उत्पादन के लिए मशीन की अभिकल्पना की गई होती है। जिससे वास्तविक उपभोक्ता के यहाँ समुच्चयित (assembled) मशीन टूल प्रस्तावित उत्पादों का निर्धारित सीमाओं के अंतर्गत् उत्पादन कर सकें। कार्यखंडों का मापन उपयुक्त मापन औजारों से किया जाना चाहिये।

भारण परीक्षण तथा उत्पाद परीक्षण प्रायोगिक परीक्षण होते हैं। ये परीक्षण स्वीकारी परीक्षणों (acceptance tests) का भाग होते हैं। इनसे मुख्यतः गतिक भारण (dynamic loading) के अंतर्गत् मशीन टूलों की संरेखण यथार्थता (alignment accuracy) प्रदर्शित होती हैं। इन परीक्षणों से यह भी विदित हो जाता है, कि मशीन टूलों का उनकी नींव पर स्थापन यथार्थता से विनिर्देशों (specifications) के अनुसार हुआ है या नहीं। ये परीक्षण प्रायः निर्माणकर्ता के द्वारा विनिर्दिष्ट किए जाते हैं। लेकिन आजकल इन परीक्षणों के मानकीकृत (standardised) किए जाने की प्रवृत्ति का विकास हुआ है।

उदाहरण के लिए राष्ट्रीय मानक (national standards) तथा निर्माता निम्नलिखित विनिर्देशन देते हैं –

एक बेलनाकार कार्यखंड, जिसकी आकृति चित्र 10.5 में दर्शाई गई है, का व्यास D मिमी है। यह व्यास उसकी लम्बाई का $\frac{1}{8}$ भाग होता है। इसको उच्चतम लम्बाई 20 मिमी के तीन व्यासों के लिए मशीनित किया जाता है। मशीनित भाग बेलनाकार होने चाहिए तथा स्वीकरण (acceptance) के लिए त्रुटि 0·02 मिमी प्रति 300 मिमी से अधिक नहीं होना चाहिए।

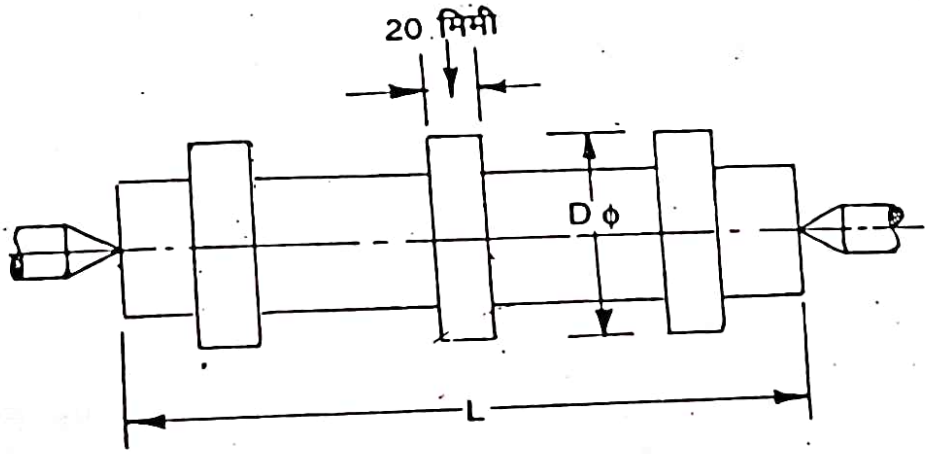

चित्र 10.5 लेथ पर प्रायोगिक परीक्षणों के लिए परीक्षण नमूना

प्रश्न 14. इन्सटालेसन और टेस्टिंग से क्या तात्पर्य है ? एक नई लेथ मशीन के लिए इन्सटालेशन और टेस्टिंग की पूर्ण प्रक्रिया लिखिये। (S/1991)

एक नई मशीन के स्थापन एवं परीक्षण के महत्वों का वर्णन कीजिये। (2001, 03, 04)

उत्तर – किसी भी मशीन के इंस्टालेशन से तात्पर्य, उक्त मशीन को उपयुक्त स्थान पर, उचित विधि द्वारा सही स्थिति में स्थापित करने से होता है; ताकि उस मशीन पर ज्यादा यथार्थता (accuracy) से कार्य किया जा सके।

किसी मशीन को स्थापित करने से पहले उसे निर्माण की यथार्थता (manufacturing accracy) तथा स्थापित करने के बाद उसकी कार्यकारी यथार्थता (working accuracy) का परीक्षण आवश्यक रूप से किया जाता है जिसे टेस्टिंग (testing) कहते हैं।

एक नई लैथ मशीन को स्थापित करने के लिए उस पर प्रमुख रूप से निम्नलिकित टेस्टिंग करना चाहिए–

(i) बेड (bed),

(अ) सीधापन (straightness), अनुदैर्ध्य व अनुप्रस्थ दोनों दिशाओं में,

(ब) साइड बेज (side ways) का सीधापन,

(स) टेलस्टॉक गाइडवेज (tailstock guideways) की कैरीज (carriage) की गति के साथ समान्तरता (parallelism)।

(ii) कार्य स्पिन्डल (work spindle),

(अ) केन्द्र बिन्दु की सत्य रनिंग (true running),

(ब) सत्य रनिंग के लिए सेन्टरिंग स्लीव (centering sleeve),

(स) अक्षीय सरकन (axial slip),

(द) टेपर (taper),

(इ) बेड के साथ क्षैतिज व ऊर्ध्वाधर प्लेन (horizontal and vertical plane) में समान्तरता।

(iii) कैरीज (carriage) का परीक्षण।

(iv) टैल स्टॉक (tail stock) का परीक्षण।

(v) लीड स्क्रू (lead screw) का परीक्षण।

इन परीक्षणों (testings) के लिए डायल गेज (dial gauge), सीधी धार (straight edge), स्प्रिट लेवल (spirit level), ऑटोकॉलीमेटर (autocollimator) आदि उपकरणों का प्रयोग किया जाता है।

प्रश्न 15. ग्राउटिंग के कोई चार प्रमुख लाभ लिखिये।

उत्तर – ग्राउटिंग के चार प्रमुख लाभ निम्नलिखित हैं–

(i) इससे मशीन बेड प्लेट, नींव की ऊपरी सतह पर दृढ़तापूर्वक टिकाकर रखी जाती है और नींव की ऊपरी सतह तथा बेड प्लेट के बीच कोई अनियमितता होगी तो वह ढक जायेगी।

(ii) मशीन एक तरफ न सरक जाये (lateral shifting) उसे रोकने के लिए मशीन बेड प्लेट की रिब (ribs) व भुजाएँ इस ग्राउट पर टिक जाती हैं जिससे हलचल (movement) नहीं हो सकती।

(iii) बेड प्लेट का द्रव्यमान (mass) बढ़ जाता है।

(iv) ग्राउटिंग के बाद कम्पन (vibrations) नहीं होते और शोर (noise) भी कम होता है।

प्रश्न 16. ग्राउटिंग के लिए कौन-कौन से पदार्थ लिये जाते हैं ?

उत्तर - ग्राउटिंग के लिए प्रमुख रूप से निम्नलिखित पदार्थ प्रयोग में लाये जाते हैं-

(i) गंधक (sulphur), (ii) सीसा (lead),

(iii) प्लास्टर ऑफ पेरिस, (iv) कंक्रीट (concrete)।

तथा, कोई पदार्थ जिसे द्रव (liquid) के रूप में बेड प्लेट के चारों ओर उंड़ेला (poured) जा सके और उस पर तेल या पानी का विपरीत प्रभाव न पड़े।

प्रश्न 17. किसी भी मशीन के इंस्टालेशन में जमीन की मिट्टी का क्या असर पड़ता है ? (1995, 99)

किसी मशीन के इन्स्टालेशन में मिट्टी का रोल क्या है ? ग्राउटिंग के उपरान्त लेवलिंग कैसे की जाती है ? (S/1996)

उत्तर - किसी भी मशीन के इन्स्टालेशन से पहले, उसे स्थापित किये जाने वाले स्थान की भूमि (soil) की गुणवत्ता (quality) की जाँच कर लेनी चाहिए। क्योंकि, विभिन्न स्थानों की भूमि की धारक क्षमता (bearing capacity) अलग-अलग होती है। धारक क्षमता से तात्पर्य है- 'इकाई क्षेत्रफल पर वह अधिकतम भार (maximum load) जो भूमि बगैर धँसे वहन कर सके' कम्पन और उनके आसपास के क्षेत्र में उनका संचरण (transmission) भूमि की गुणवत्ता पर निर्भर करता है।

भूमि के प्रकार पर विचार करते समय, केवल उसकी धारक क्षमता पर ही विचार नहीं किया जाता बल्कि, कुछ अन्य महत्वपूर्ण घटकों (factors) को भी ध्यान में रखा जाता है। उदाहरणार्थ, शैल (rock), अधिक भार (heavy loads) को तो सुरक्षापूर्वक धारण (bear) कर लेता है परन्तु, मशीनरी के नींव के रूप में विफल हो सकता है। इसकी वजह यह है कि इसमें दरार (cracks) होने की दशा में इसमें लम्बी दूरी तक कम्पन संचारित करने की शक्ति विकसित हो जाती है। यदि मशीन या इंजिन को सीधे ही बीच में कंक्रीट की संस्तर (bed) के बगैर, शैल (rock) पर संस्थापित कर दिया जाये तो कठोर शैल (hard rock) की अत्यन्त दृढ़ता (extreme rigidity) के कारण नींव बोल्ट (foundations bolts) ढीले पड़ सकते हैं तथा टूट भी सकते हैं।

कठोर बजरी भूमि (hard gravel soil) नींव रखने के लिए उत्तम रहती है। इसमें धारक क्षमता काफी अधिक रहती है तथा शुष्क (dry) रहती है व बाह्य कारण से धँसती भी नहीं है। नरम भूमि (soft soil) की समान सतह द्वारा अपेक्षाकृत कम वजन वहन किया जा सकता है। यदि जमीन बहुत नरम हो तो वजन झेलने के लिए खम्भों (piles) या प्रबलित राफ्ट् (reinforced rafts) की आवश्यकता पड़ सकती है। गीली मिट्टी भी अधिक विश्वसनीय नहीं होती। इसकी धारक क्षमता कम रहती है। यदि, यह सघन (more dense) व शुष्क हो तो यह अपेक्षाकृत अधिक भार (more load) वहन कर सकती है। दलदल वाली जमीन (muddy ground) भी विश्वसनीय नहीं रहती।

ग्राउटिंग के बाद मशीन को फ्लोर (floor) के बोल्टों के ऊपर सावधानीपूर्वक रखा जाता है और सही ढंग से संरेखित (properly aligned) किया जाता है। इस मशीन का अच्छी प्रकार प्रकार लेवलिंग (levelling) भी किया जाता है। लेवलिंग से तात्पर्य, मशीन के पूर्णरूप से क्षैतिज अवस्था (horizontal position) में होने से है। इसके लिए स्प्रिट लेवल (spirit level) का प्रयोग किया जाता है। स्प्रिट लेवल को मशीन पर लांगीट्यूडीनल (longitudinal) व क्रॉस (cross) दोनों दिशाओं में रखकर परीक्षण किया जाना चाहिए।

प्रश्न 18. एलाइनमेन्ट कैसे किया जाता है ? समझाइये।

उत्तर - किसी भी मशीन या इन्जिन को यथास्थान रखने के बाद उसका सावधानीपूर्वक संरेखण (alignment) किया जाता है। संरेखण से तात्पर्य-मशीन के विभिन्न अंगों का सही स्थिति में लगाना तथा आवश्यक अंगों का एक सीध में लाना। इसके अलावा मशीन का लेवलिंग (levelling) करना भी इसी प्रक्रिया में शामिल रहता है।

इन्जिन व चालित मशीन युग्मन (coupling) की जाँच करने के लिए युग्मन फ्लेंजों पर आड़ी दिशा में सीधी धार (straight edge) रखकर देखा जाता है। ऐसा 90° पर चार बिन्दुओं पर किया जाता है। युग्मन अर्द्धों (coupling-halves) के फलकों (faces) के बीच दूरी समान हो, यह जाँच मोटाई गेज (thickness gauge) से की जाती है। इसी तरह घिरनियों का संरेखण भी सीधी धार व गुनिया (tri-square) की मदद से किया जाता है। लेवलिंग के लिए स्प्रिट लेवल का उपयोग किया जाता है।

प्रश्न 19. किसी भी मशीन टूल को स्थापित (इरेक्ट) करने की विधि को संक्षेप में समझाइये। आप यह किस प्रकार से सुनिश्चित कर पायेंगे कि मशीन को ठीक ढंग से 'इरेक्ट' कर लिया गया है ?

(S/1992)

उत्तर - किसी भी मशीन टूल को इरेक्ट (erect) करने से तात्पर्य, उसे सही स्थान पर उचित ढंग से स्थापित करने से होता है। इस कार्य में प्रमुख रूप से निम्नलिखित चरण होते हैं-

(i) लोकेशन (Location) – सबसे पहले मशीन टूल को शॉप में स्थापित करने के लिए उचित स्थान का चयन किया जाता है। इसके अन्तर्गत, मशीन के सही कार्य कर सकने के लिए आवश्यक स्थान (space required) का भी ध्यान रखा जाता है।

(ii) फाउन्डेशन (Foundation) – फाउन्डेशन का सीधा प्रभाव मशीन की यथार्थता (accuracy), कम्पन (vibrations) आदि पर पड़ता है। इसलिए, यह जरूरी है कि फाउन्डेशन इस प्रकार की हो कि वह मशीन को सही रूप से आलम्बित (support) कर सके, मशीन को सही प्रकार से संरेखित (align) रख सके, मशीन के विभिन्न प्रत्यागामी (reciprocating) व घूर्णी (rotary) अंगों के असंतुलन (unbalance) के कारण उत्पन्न होने वाले कम्पनों (vibrations) को शोषित (absorb) कर सके। लेकिन अगर, फाउन्डेशन सही प्रकार से नहीं बनाई गई होगी तो मशीन पर कार्य करते समय लगातार ही दिक्कतें आयेंगी।

(iii) इरेक्शन (Erection) – फाउन्डेशन के बना लेने के बाद मशीन को उपयुक्त स्थिति में रखा जाता है। फिर, मशीन के आधार (base) में से फाउन्डेशन बोल्टों (foundation bolts) को डालकर फाउन्डेशन में ढीला (loose) छोड़ दिया जाता है। तत्पश्चात् मशीन की सावधानीपूर्वक लेवलिंग (levelling) और एलाइनिंग (aligning) की जाती है और तब, फाउन्डेशन बोल्टों को ग्राउट (grouted) करके कस (tight) दिया जाता है। बाद में, मशीन की फिर से लेवलिंग व एलाइनिंग कर ली जाती है।

मशीन का सही रूप से इरेक्शन हुआ है या नहीं, यह सुनिश्चित करने के लिए स्प्रिट लेवल (spirit level) को मशीन के विभिन्न स्थानों पर रखकर उसकी लेवलिंग की जाँच कर लेनी चाहिए।

प्रश्न 20. परीक्षण चार्ट क्या होते हैं ? इनका उपयोग बताइये।

उत्तर – परीक्षण प्रमाण पत्र (test certificate) का प्रपत्र/फार्म (proforma) निर्मित करने के लिए परीक्षण चार्ट एक सुगम आधार होता है। इस चार्ट में प्रत्येक परीक्षण इस क्रम में दिया जाता है कि पहले मशीन टूल का निर्माण यथार्थता परीक्षण होता है, तद्उपरांत निष्पादन यथार्थता परीक्षण होता है। प्रत्येक परीक्षण स्केचों अर्थात् रेखा चित्रों (sketches) के द्वारा व्यक्त करके परीक्षण विधि भी दर्शाई जाती है। इस प्रकार परीक्षण चार्ट में क्रमांक (serial No.), परीक्षण मद (test item), स्केच (sketch), प्रयोग किये जाने वाले मापन यंत्र (measuring instruments), अनुमेय त्रुटि मिमी में (permissible error in mm), तथा परीक्षण अनुदेश (testing instructions) का समावेश रहता है।

प्रश्न 21. परीक्षण चार्ट के अन्तर्गत सह्यता का परीक्षण तथा दिशा किस प्रकार व्यक्त किये जाते हैं ?

उत्तर – विमा पर सह्यता अथवा सीमांतर: उपरि तथा निम्न विचलनों (upper and lower deviations) [उच्चतम तथा अल्पतम सीमा (maximum and minimum limit)] के मध्य के बीजीय अंतर (algebraic difference) को विमा की सह्यता अथवा सीमांतर कहते हैं।

परीक्षण चार्ट में सह्यताएं तीन प्रकार के व्यक्त की जाती हैं–

(i) द्विपार्श्विक सह्यता (bilateral tolerance) –जैसे, ± 0·03 मिमी प्रति 1000 मिमी।

(ii) चिन्ह रहित सह्यता (tolerance without sign) –जैसे, 0·03 मिमी प्रति 1000 मिमी।

(iii) एकपार्श्विक सह्यता (unilateral tolerance) –जैसे, 0 से 0·3 मिमी प्रति 1000 मिमी।

द्विपार्श्विक सह्यता अर्थात् धन (plus) या ऋण (minus) सह्यता में अनुमेय त्रुटि (permissible error) विनिर्दिष्ट संदर्भ लम्बाई (specified reference length) के मध्य किसी भी दिशा में स्वीकार्य होती हैं। इस प्रकार त्रुटि की कुल परास (total range of error) विनिर्दिष्ट सह्यता से दो गुणी होती है।

चिन्ह रहित सह्यता के अन्तर्गत संदर्भ लम्बाई पर मापी गई त्रुटि कुल परास की होती है त्रुटि किसी भी दिशा में हो सकती है।

एक पार्श्विक सह्यता में विनिर्दिष्ट सीमाओं के अंतर्गत त्रुटि की कुल परास, कुल संदर्भ लम्बाई के लिए होती है, तथा त्रुटि की दिशा महत्वपूर्ण होती है, जो परीक्षण चार्ट में दी गई होती है।

प्रश्न 22. लेथ के लिये स्वीकारी या संरेखण परीक्षणों का सचित्र विवरण दीजिये।

किसी सेन्टर लेथ के एप्लायमेन्ट टेस्ट हेतु परीक्षणों की सूची बनाइये। इन परीक्षणों हेतु किन उपकरणों का उपयोग किया जाता है। (2005)

उत्तर – लेथ पर किए जाने वाले विभिन्न स्वीकारी या संरेखण परीक्षणों का विवरण निम्नलिखित है–

समतल संस्थान के लिए परीक्षण (Test For Level Installation) – चित्र 10.6 में लेथ के संस्तर मार्गों या स्लाइड मार्गों के परीक्षण का अभिन्यास दर्शाया गया है।

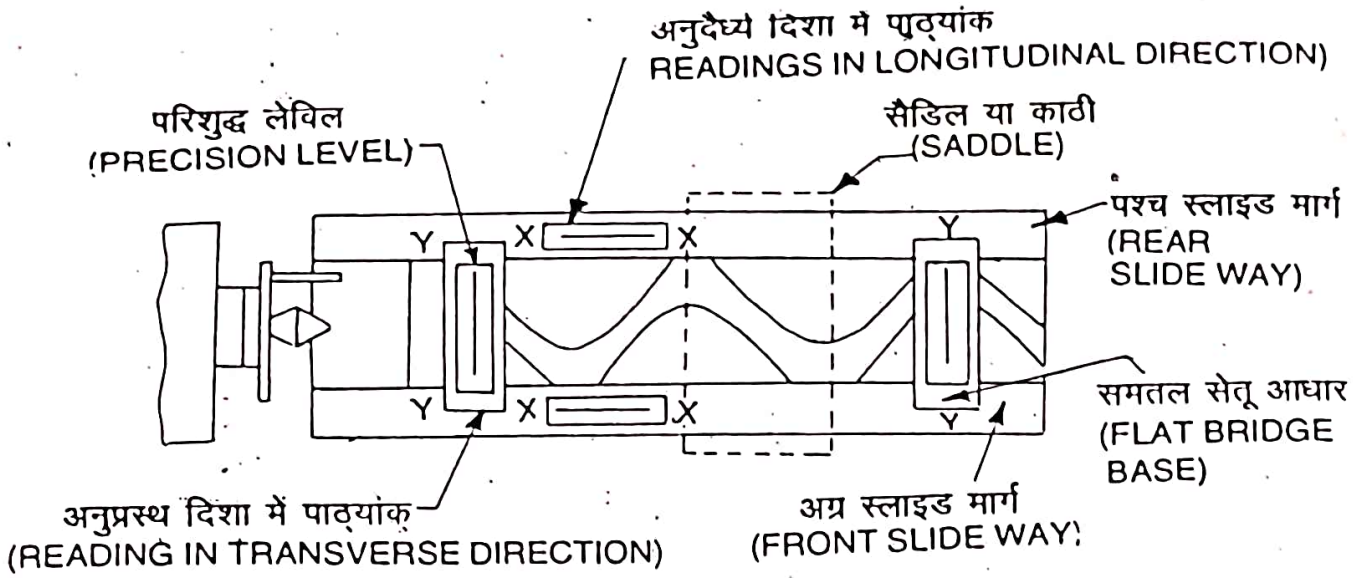

चित्र 10.6 लेथ पर संरेखण परीक्षण

सैडिल को लेथ के आधार पादों (bed feet) के लगभग मध्य में रखकर परिशुद्ध लेबिल को X—X दिशा में स्थापित करके अनुदैर्ध्य दिशा (longitudinal direction) की लेबिल प्राप्त की जाती है। Y–Y दिशा में अनुप्रस्थ परीक्षण (transeverse test) के लिए समतल सेतु आधार (flat bridge base) का उपयोग किया जाता है। प्रत्येक दिशा का पाठ्यांक एक साथ लिया जाता है। समतलता की त्रुटि को वेजों या शिमों (shims) का, मशीन के पादों या पैडों के नीचे उपयुक्त स्थान पर उपयोग करके समाप्त किया जाता है।

लेथ, त्रिज्य वेधन यंत्रों तथा मिलीयन मशीनों के लिये दोनों दिशाओं अर्थात् अनुदैर्ध्य तथा अनुप्रस्थ में अनुमेय त्रुटि (permissible error) प्रति 1000 मिमी क्रमशः (0·02, ± 0·02), (0·1, ± 0·1) तथा (± 0·04, ± 0·04) मिमी होती है।

तर्कु अक्ष संस्तर के समांतर (Spindle Axis Parallel to Bed) – इस परीक्षण के लिए डायल गेज, स्टैन्ड तथा विशिष्ट मेन्ड्रेल की आवश्यकता होती है। मेन्ड्रेल का व्यास 25 मिमी तथा लम्बाई 300 मिमी होती है, जिसका टेपरित सिरा शीर्ष स्कंध तर्कु में फिट हो जाता है। मेन्ड्रेल यथार्थता से अपघर्षित किया हुआ होता है, जिसके समतल तथा टेपरित भाग सकेन्द्री (concentric) होते हैं।

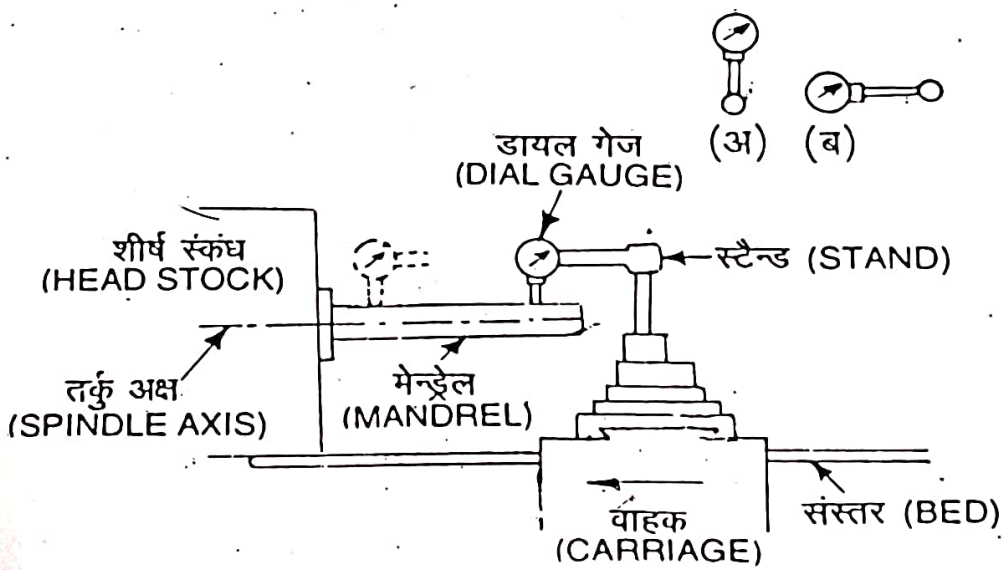

चित्र 10.7 तर्कु अक्ष तथा संस्तर की समांतरता का परीक्षण

मेन्ड्रेल को तर्कु पर फिट कर दिया जाता है। लेत के वाहक पर बद्ध डायल गेज का प्लंजर, मेन्ड्रेल के सिरे को छूता हुआ रखा जाता है और पाठ्यांक ले लिया जाता है, (चित्र 10.7)। वाहक को शीर्ष-स्कंध की दिशा में संचलित किया जाता है। फिर दूसरे सिरे पर समांतर स्थिति में डायल गेज द्वारा पाठ्यांक लिया जाता है। ये पाठ्यांक उदग्र तथा क्षैतिज स्थितियों जैसा चित्र (अ) तथा (ब) में दर्शाया गया है, लिए जाते हैं। 300 मिमी प्रदोल व्यास (swing diameter) की लेथ की दोनों अनुमेय त्रुटियां 0·08 मिमी प्रति मीटर से कम होना चाहिए।

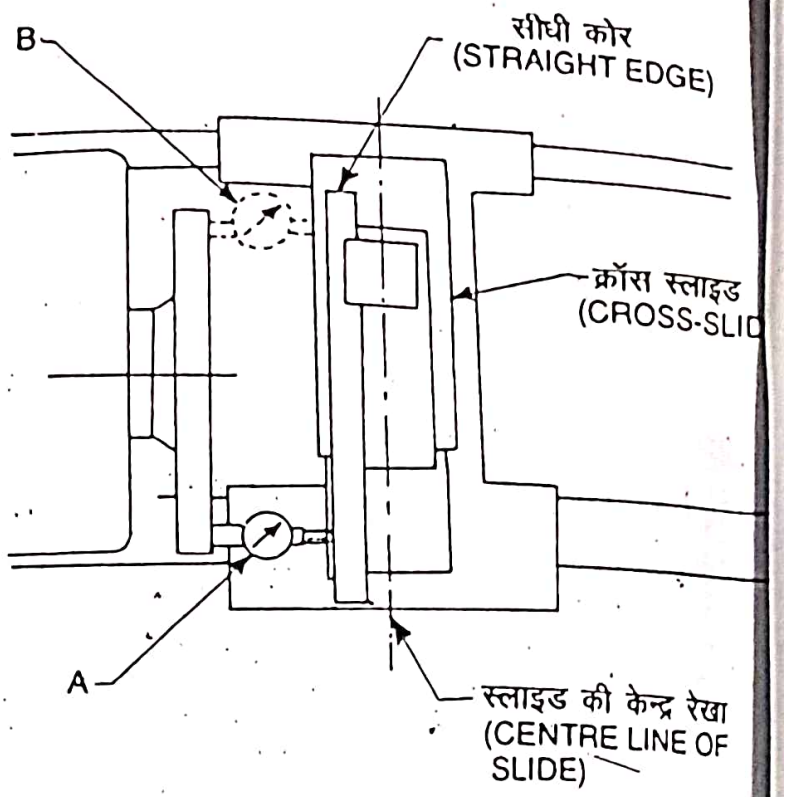

चित्र 10.8 क्रॉस स्लाइड तथा तर्कु अक्ष की वर्गीयता परीक्षण

क्रॉस स्लाइड तर्कु अक्ष लंब (Cross-Slide Perpendicular to Spindle Axis) इसके लिए दो विधियों का उपयोग किया जा सकता है, (i) ज्यामितीय तथा (ii) प्रायोगिक। प्राय दोनों परीक्षण किए जाते हैं।

ज्यामितीय परीक्षण में सीधी कोर (straight edge) को क्रॉस स्लाइड के साथ इस प्रक क्लैम्प किया जाता है, कि उसकी कोर क्षैतिज तथा तर्कु अक्ष के लंब (perpendicular) रहे डायल गेज को फलक प्लेट (face plate) के किनारे पर फिट कर दिया जाता है। उसका प्लंज सीधी कोर के स्पर्शी रखा जाता है, (चित्र 10.8)। सीधी कोर को समायोजित करके, यथार्थता स्थिति A तथा B पर, तर्कु को 180° घुमाकर, तर्कु अक्ष के लंब किया जाता है। क्रॉस स्लाइड को उसके गाइडों पर सीधी कोर सहित संचलित करके डायल गेज प्लंजर को पार किया जाता है यदि संचलन की रेखा सीधी कोर के समांतर नहीं होती, तब वह तर्कु अक्ष के लंब भी नहीं होत है और यह डायल गेज के पाठ्यांकों से विदित हो जाता है।

दूसरी विधि में कार्यखंड को चक पर आरोपित करके उस पर एक हल्का कट लगाया जा है। कार्यखंड के दोनों सिरों पर सीधी कोर तथा स्लिप गेजों की सहायता से अवतल (concavity) मापी जाती है।

300 मिमी लेथ पर सीधेपन (straghtness) का अंतर 0·08 मिमी प्रति मीटर से अधिक नहीं होना चाहिए।

ऊपरी स्लाइड का तर्कु के समांतर संचलन (Movement of Upper Slide Parallel to Spindle) – परीक्षण मेन्ड्रेल को तर्कु पर फिट किया जाता है। डायल गेज को ऊपरी स्लाइड पर क्लैम्प किया जाता है। डायल गेज का प्लंजर, मेन्ड्रेल के एक सिरे को स्पर्श करता हुआ रखा जाता है, (चित्र

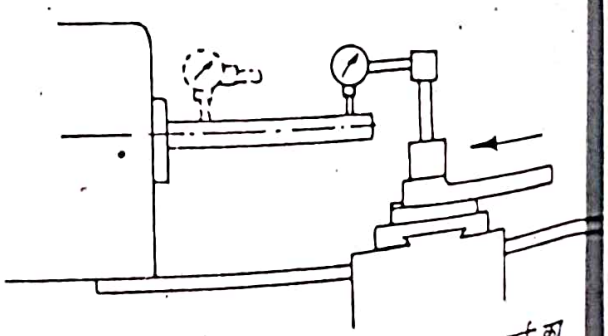

चित्र 10.9 ऊपरी स्लाइड संचलन तथा तर्कु का समांतरता परीक्षण

10.9)। डायल गेज प्लंजर को स्थिर मेन्ड्रेल पर एक सिरे से दूसरे सिरे तक, स्लाइड द्वारा संचलित किया जाता है। स्लाइड के कुल संचलन में त्रुटि 0·02 मिमी से अधिक नहीं होना चाहिए। यह परीक्षण केवल उदग्र तल में ही किया जाता है।

केन्द्रकों की रेखा संस्तर के समांतर (Line of Centres Parallel with Bed) – मशीन के केन्द्रकों के मध्य मेन्ड्रेल को आधारित करके, डायल गेज को वाहक पर क्लैम्प किया जाता है, (चित्र 10.10)। डायल गेज का प्लंजर मेन्ड्रेल को छूता हुआ रखा जाता है। मेन्ड्रेल को स्थिर रखकर, डायल गेज प्लंजर को वाहक द्वारा एक सिरे से दूसरे सिरे तक संचलित किया जाता है। पुच्छ स्कंध के सेट करने की दूरी (set-over distance) 0·04 मिमी प्रति मीटर से अधिक नहीं होना चाहिए। यह परीक्षण उदग्र तल में किया जाता है।

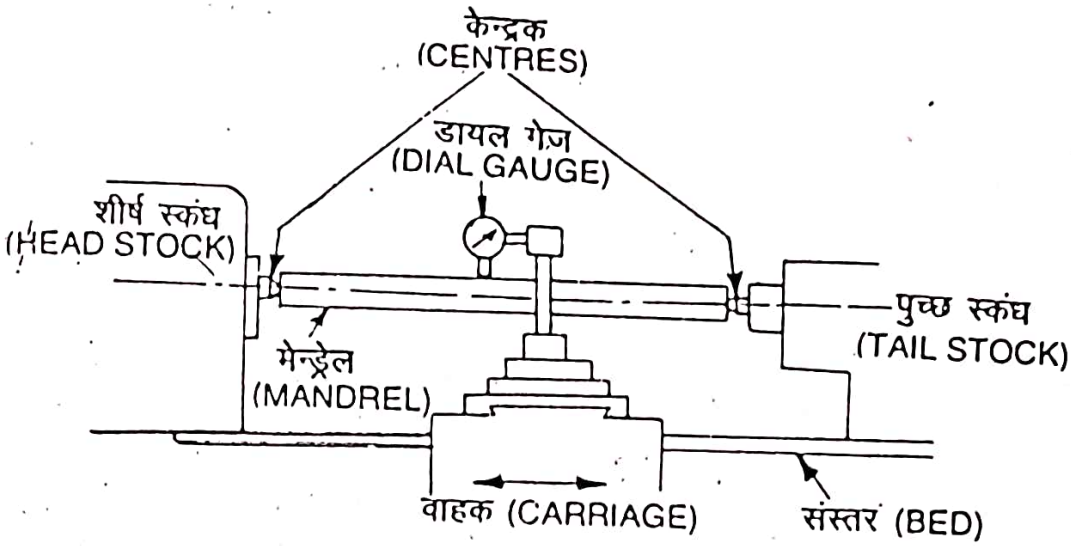

चित्र 10.10 केन्द्रकों की रेखा का संस्तर के साथ समांतरता परीक्षण

पुच्छ स्कंध क्विल संचलन, संस्तर के समांतर (Tail Stock Quill Movement Parallel to Bed) — पुच्छ स्कंध क्विल को अधिकतम बाहर की स्थिति में रखते हुए, क्लैम्प कर दिया जाता है। डायल गेज को उदग्र स्थिति (अ) में रखते हुए, डायल गेज प्लंजर को क्विल के एक सिरे से दूसरे सिरे तक, वाहक द्वारा संचलित किया जाता है। यह अंतर 0·02 मिमी से अधिक नहीं होना चाहिए। फिर डायल गेज को क्षैतिज स्थिति (ब) में रखते हुए, क्विल के एक सिरे से दूसरे सिरे तक वाहक द्वारा संचलित किया जाता है। यह अंतर 0·01 मिमी से अधिक नहीं होना चाहिए, (चित्र 10.11)।

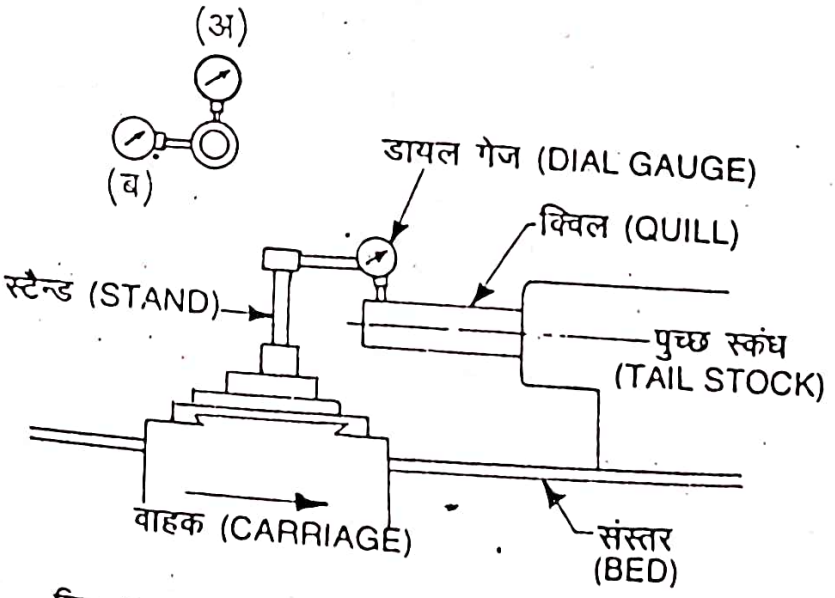

चित्र 10.11 क्विल संचलन का संस्तर के साथ समांतरता परीक्षण

Flank Wear :-

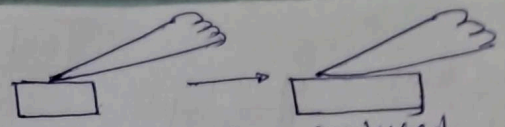

Effect :- 1) Flank wear directly affect the component dimensions produced (out of tolerance zone).

Therefore flank wear is usually the most common determinant of tool life.

$$\text{Tool life} \propto \frac{1}{\text{Flank wear}}$$

Crater Wear :-

- For crater wear, temperature is main culprit & ~~tool~~ tool defuse into the ~~chip~~ chip material. (Diffussion Process)
- ∵ max temp^r over tool rake face is at some distance from the tool tip & hence crater wear is occur at some distance from the tool tip.
- So, for diffussion to occur, high temp^r is prime requirement & for high temp^r, high velocity ~~with~~ & material (Ductile) that is able to produce continuous chip.
- Therefore crater wear is predominating in high cutting speeds
- Crater depth increases linearly with time
- MRR ↑ – Crater wear ↑
- It neither effect the tool rake angle nor workpiece surface finish hence it is not our prime concern.

Tool Life :-

Tool life criteria can be defined as the predetermined numerical value of any type of tool deterioration which can be measured by some of the following ways

a) Actual cutting time to failure — T = 40 minute
b) Volume of metal removed — 2000 m^3 chip's volume
c) Number of parts produced — 100 units
d) Cutting speed for a given time — 20 metre/minute.

Tool Failure

1) Tool Failure is of two type-

a) Slow Death :-

Gradual or Progressive wearing away of rake face (crater wear) or flank (flank wear) of the cutting tool or both.

- Hence able to machine large no. of workpieces before tool failure & therefore have high useful life.

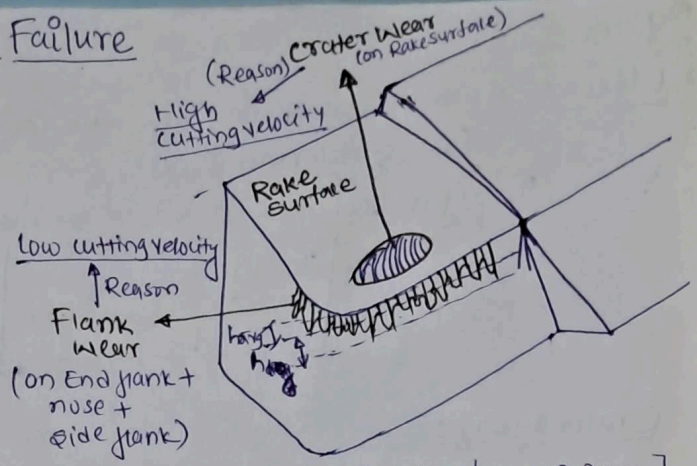

A(c to ISO - $h_{avg} \leq 0.3mm$
$h = h_{local} \leq 0.5mm$]

b) Sudden Death :-

- Failure leading to premature end of the tool.
- But the reason for it is still unknown. Since the mechanism of tool failure is difficult to Predict but still some are the valid reasons given by the researchers

a) Plastic deformation → Tends to change the angles
(b) Brittle fracture → (crack)
(c) Fatigue fracture
(d) edge chipping → Removal/broken out of edge

- Sudden death mainly seen on the notch hence known as notch wear i.e A wide & deep groove is found to develop on the principal flank at the outer end of the main cutting edge. Such notch is caused mechanically by the sharp hardened work surface in contact with the outer end of the main cutting edge.

2) Tool Wear :- (1) 3 types → Flank Wear, Crater Wear, Chipping off of the cutting edge.

Note :- Since Crater wear is not coming in contact with workpiece hence it will not affect it therefore it is not in our Prime concern.

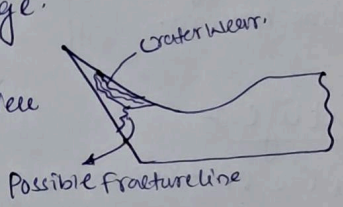

b) Flank Wear :-

Reason :- 1) Abrasion by hard particles & inclusions in the workpiece e.g- Faylitte present in castings

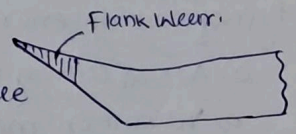

(2) Since at low cutting velocity, BUE formation is prominent & hence when it broken down than it leads to shearing off the microwelds between tool & work material.

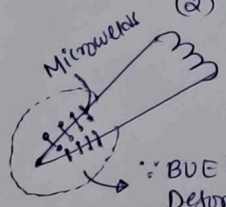

∵ BUE is plastically Deformed materials hence harden in nature.

(3) Ploughing of BUE :- When BUE chips off from the end than there is Possibility that it will pass via clearance surface & as a result of it, it not only disturb the machined surface but also the clearance surface of the tool.

4) MRR ↑
- Ortho → t b(V↑)
- Turning → f d(V↓)

→ ∵ ↑ in (t×b) & ↑ in (fd) leads to formation of BUE as generation of heat is increased & hence flank wear increased.